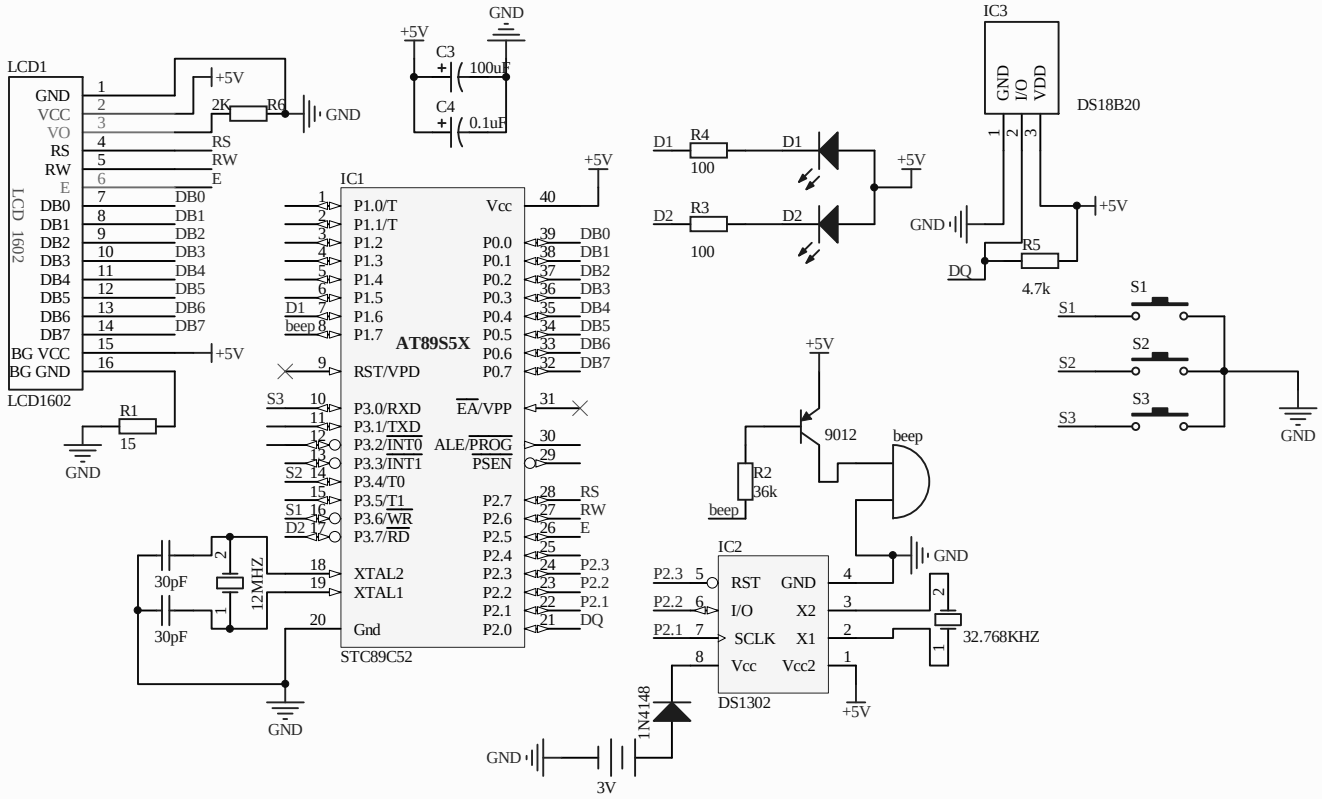

Title		
Size A4	Number	Revision
Date: 2012/11/5	Sheet of	
File: E:\我的电子制作\..\TIMETIME.SCHDOC	Drawn By:	