1100MM Typhoon

Operating Manual

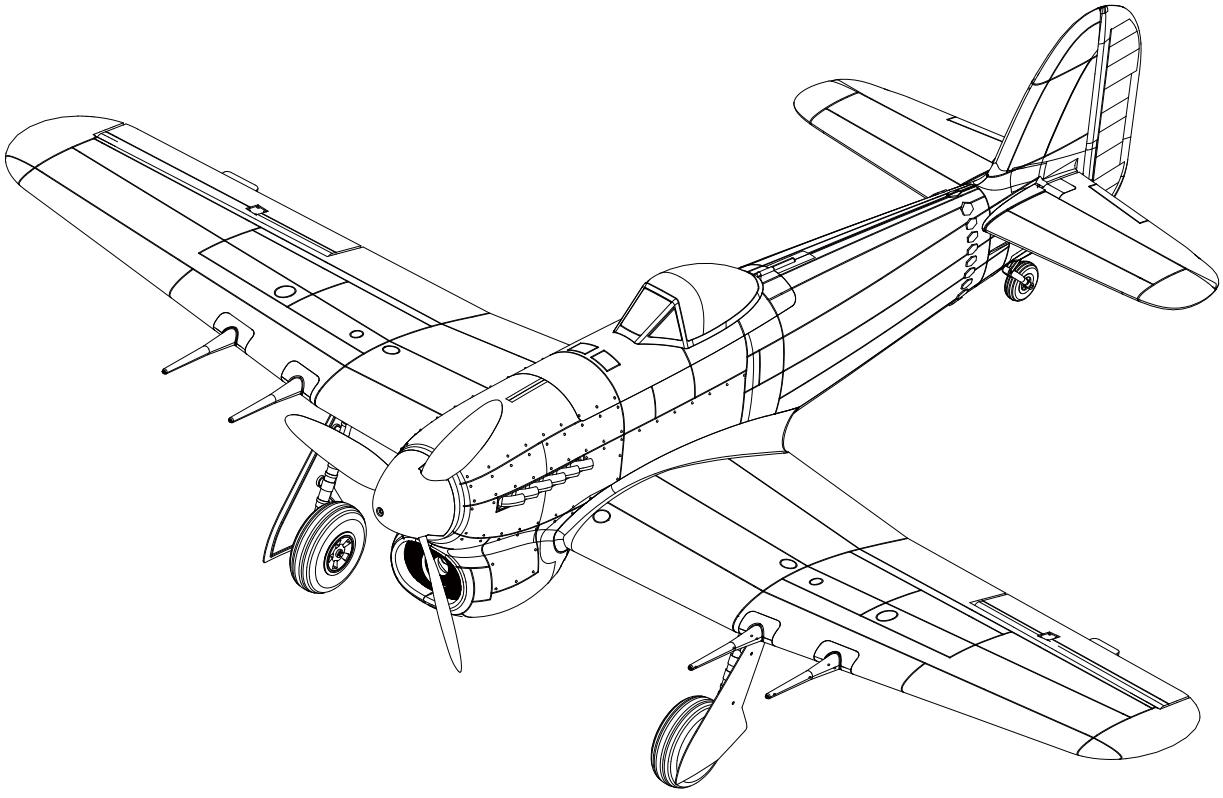

REALISTIC
- RETRACT & FLAPS INSTALLED

RIGID
- STRONG DURABLE EPO

STABLE
- SMOOTH FLYING PERFORMANCE

FMSMODEL.COM

WARNING

⚠

WARNING: Read the ENTIRE instruction manual to become familiar with the features of the product before operating. Failure to operate the product correctly can result in damage to the product, personal property and cause serious injury.
This is a sophisticated hobby product and NOT a toy. It must be operated with caution and common sense and requires in injury or damage to the product or other property. This product is not intended for use by children without direct adult supervision.
This manual contains instructions for safety operation and maintenance. It is essential to read and follow all the instructions and warnings in the manual prior to assembly, setup or use, in order to operate and avoid damage or serious injury.

Safety Precautions and Warnings

As the user of this product. you are solely responsible for operating in a manner that does not endanger yourself and others or result in damage to the product or the property of others. This model is controlled by a radio signal subject to interference from many sources outside your control. This interference can cause momentary loss of control so it is advisable to always keep a safe distance in all directions around your model, as this margin will help avoid collisions or injury.
Age Recommendation: Not for children under 14 years. This is not a toy.
•Never operate your model with low transmitter batteries.
•Always operate your model in an open area away from cars, Traffic or people.
•Avoid operating your model in the street where injury or damage can occur.
•Never operate the model in the street or in populated areas for any reason.
•Carefully follow the directions and warnings for this and any optional support equipment (chargers. Rechargeable battery packs, etc.) you use.
•Keep all chemicals, small parts and anything electrical out of the reach of children.
•Moisture causes damage to electronics. Avoid water exposure to all equipment not specifically designed and protected for this purpose.
•Never lick or any place of any your model in your mouth as it could cause serious injury or even death.

Safety

Lithium Polymer (Li-Po) Battery Warning
CAUTION: Always follow the manufacturer's instructions for safe use and disposal of batteries. Fire, property damage, or serious injury can result from the mishandling of Li-Po batteries.
➢By handing, charging or using a Li-Po Battery you assume all risks associated with lithium batteries. If at any time the batteries begin to swell, or balloon, discontinue use immediately!
➢Always store the batteries at room temperature in a dry area to extend the life of the battery, Always transport or temporarily store the battery in a temperature range of 40-120F. Do not tore the battery or model in a car or in direct sunlight. If stored in a hot car, the battery can be damaged or even catch fire.
➢Never use a Ni-Mh Charger to charger Li-Po Batteries. Failure to charge the battery with a Li-Po compatible charger may cause fire resulting in personal injury and property damage.
➢Never discharge Li-Po Cells below 3V.
➢Never leave charging batteries unattended.
➢Never charge damaged batteries.
Charging the Flight Battery Warning
➢Use a battery charger that is designed to safely charge the Li-Po Battery. Read the charger instructions care fully before use. When charging the battery, make certain the battery is on a heat resistant surface. It is also highly recommended to place the Li-Po Battery inside a fire resistant charging bag readily available at hobby shops or online.

Table of Contents

Introductions ····· 3
Contents of Kit ····· 4
Assemble the plane ····· 5
Install the battery and Radio installation ····· 8
Get your model ready to fly ····· 9
The transmitter and model setup ····· 9
Check the control throws ····· 10
Clevis Installation ····· 11
Control Horn and Servo Arm Settings ····· 11
Install the propeller and spinner ····· 12
Center of Gravity(CG) ····· 12
Before flying the model ····· 13
Flying course ····· 14
Trouble shooting ····· 15
Spare parts list content ····· 16
ESC instruction ····· 17

Introductions

The Hawker Typhoon, was a British single-seat fighter-bomber, produced by Hawker Aircraft. When the Luftwaffe brought the formidable Focke-Wulf Fw 190 into service in 1941, the Typhoon was the only RAF fighter capable of catching it at low altitudes; as a result it secured a new role as a low-altitude interceptor. From late 1942 the Typhoon was equipped with bombs and from late 1943RP-3 ground attack rockets were added to its armoury. With those weapons and its four 20mm Hispano cannon, the Typhoon became one of the Second World War's most successful ground-attack aircraft.

Take to the skies with one of FMS's latest offerings, the Hawker Typhoon 1100mm PNP! This scale 1100mm wingspan warbid is a sight to behold. Reinforce wing surfaces allow flyers to perform advanced maneuvers like point rolls, barrel rolls, Immelmanns, half-Cubans, and split S with ease. Retractable landing gear, 3-blades prop with spinner, and spit flaps all add to the realism of this incredible model. This plane has the power, detailed features, and durability that discerning flyers will appreciate, if you are looking for a British warbirds fighter, this is a great choice for you.

FEATURES:

* Realistic scale features including WWII RAF paint scheme, hand painted pilot figure, gun turrets, and molded panel lines
* The latest high-ratio foam, which lightens the airplane's weight.
* Servoless electronic retractable landing gear
* New structure optimizes the performance.
* Scale 3-blade propeller
* Portable wingspan
* Split flap

Specifications

Wingspan: 1100mm/43.3in
Overall Length: 845mm/33.3 in
Flying Weight: Around 1300g(45.9oz)
Motor Size: Brushless 3536-KV850
Wing Load: 66.0 g/dm² (0.15oz/in²)
Wing Area: 19.7dm²(305.4 sq.in)
ESC: 40A
Servo: 9g Servo x 6

Contents of Kit

Before assembly, please inspect the contents of the kit. The photo below details the contents of the kit and labels. If any parts are missing or defective, please indentify the name or part number (refer to the spare parts list near the end of the manual) then contact your local shop or email us: support@fmsmodel.com

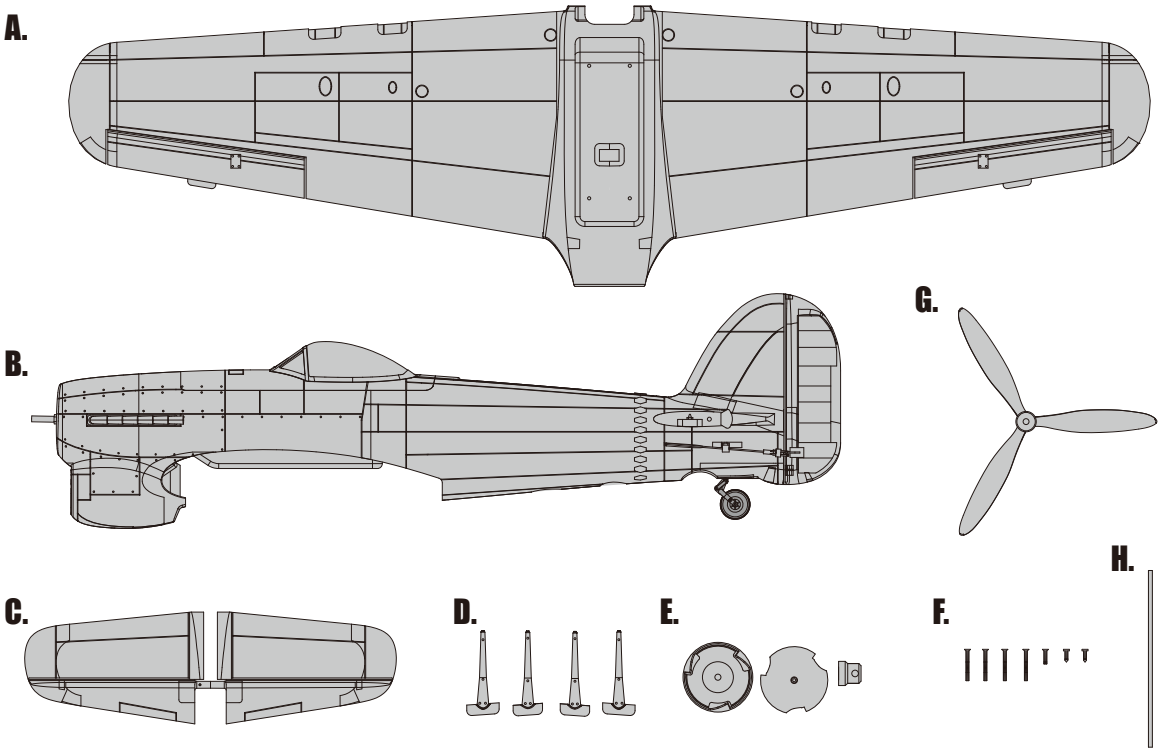

A: Main wing
B: Main fuselage
C: Horizontal stabilizer (Left and Right)
D: Cannon
E: Spinner set
F: Screws(1-PM3.0*10MM,4-HKM3.0*40MM,2-PA2.6*10MM)
G: Propeller
H: Horizontal stabilizer tube

Horizontal Tail Installation

1. Slide the horizontal tail into the slot in the rear of the fuselage. Ensure the control horn face down.

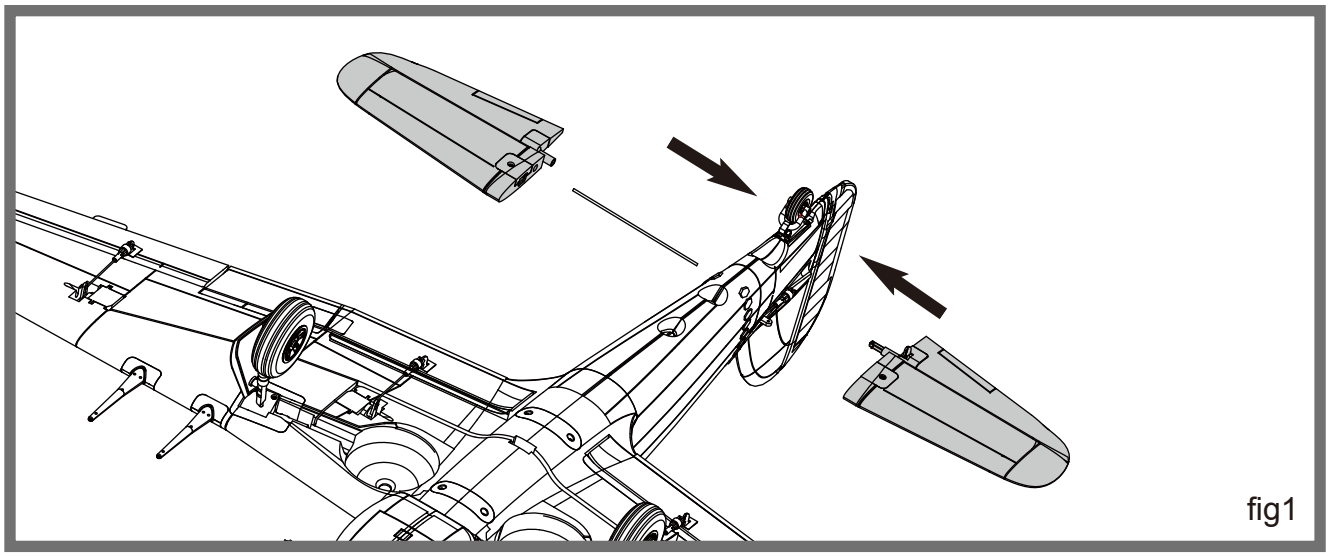

fig1

2. Secure the horizontal tail piece in place using the include screw: PA2.6*10. Use caution to avoid over-tightening the screw.

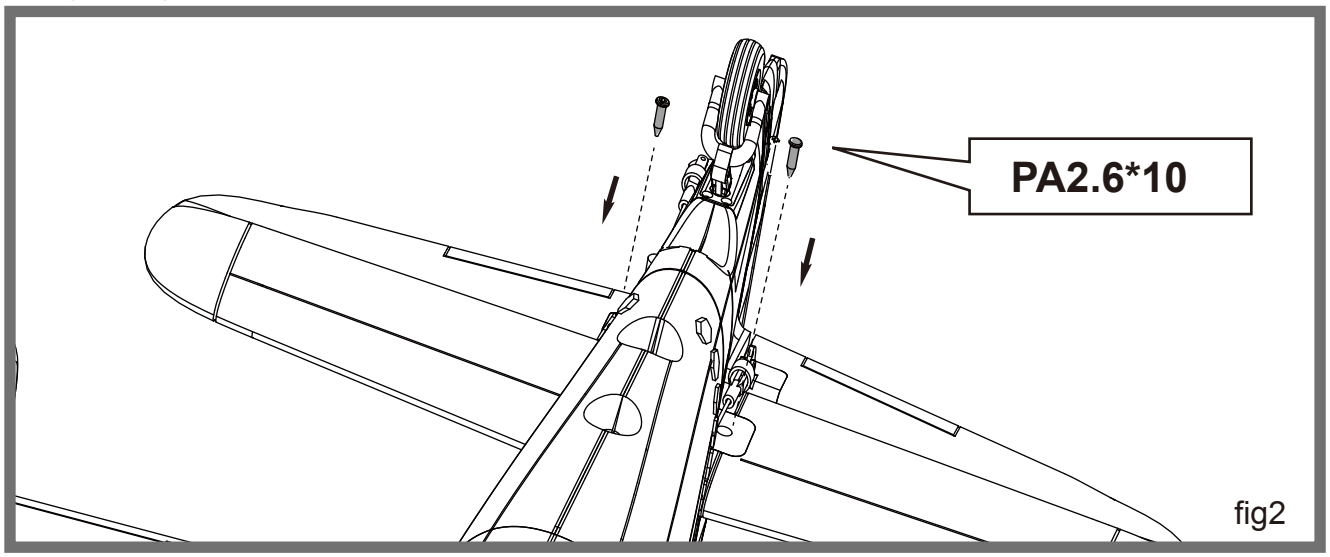

fig2

3. Using your radio center, the elevator servo and attach the control arm to the servo then attach the clevis to the elevator control horn. See instruction for clevis connection on page 11.

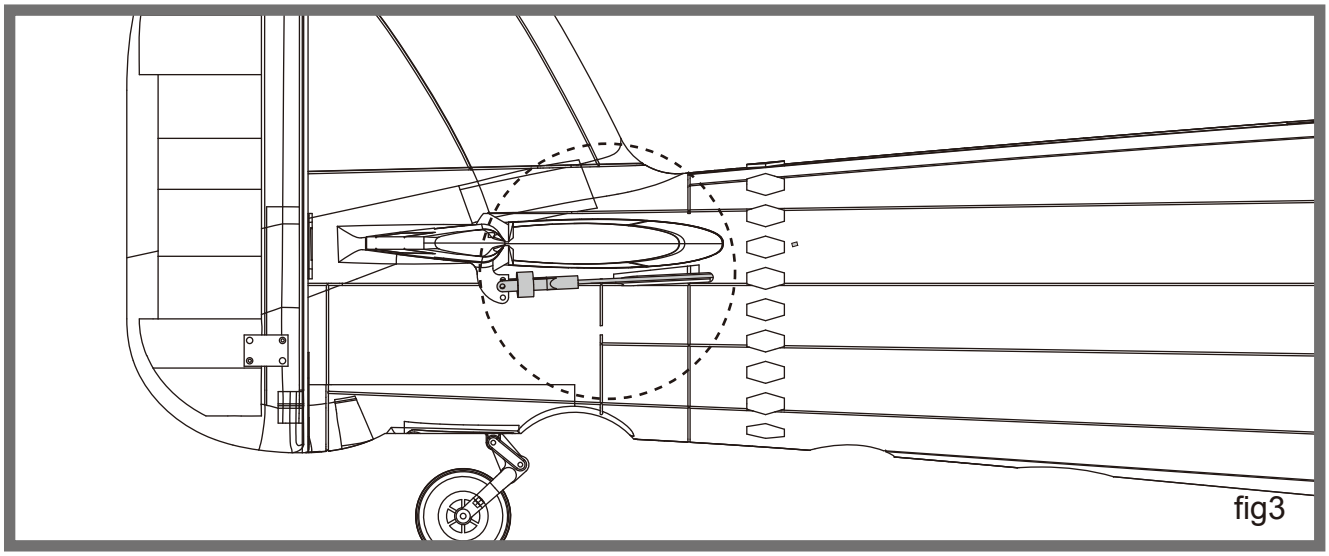

fig3

4. Install the wing
a. Remove the canopy hatch
b. Guide the Multi Connector wires through the hole located in the bottom of the fuselage as shown.
c. Align the wing with the fuselage and secure into position using screws HKM3.0*40mm as shown in fig5

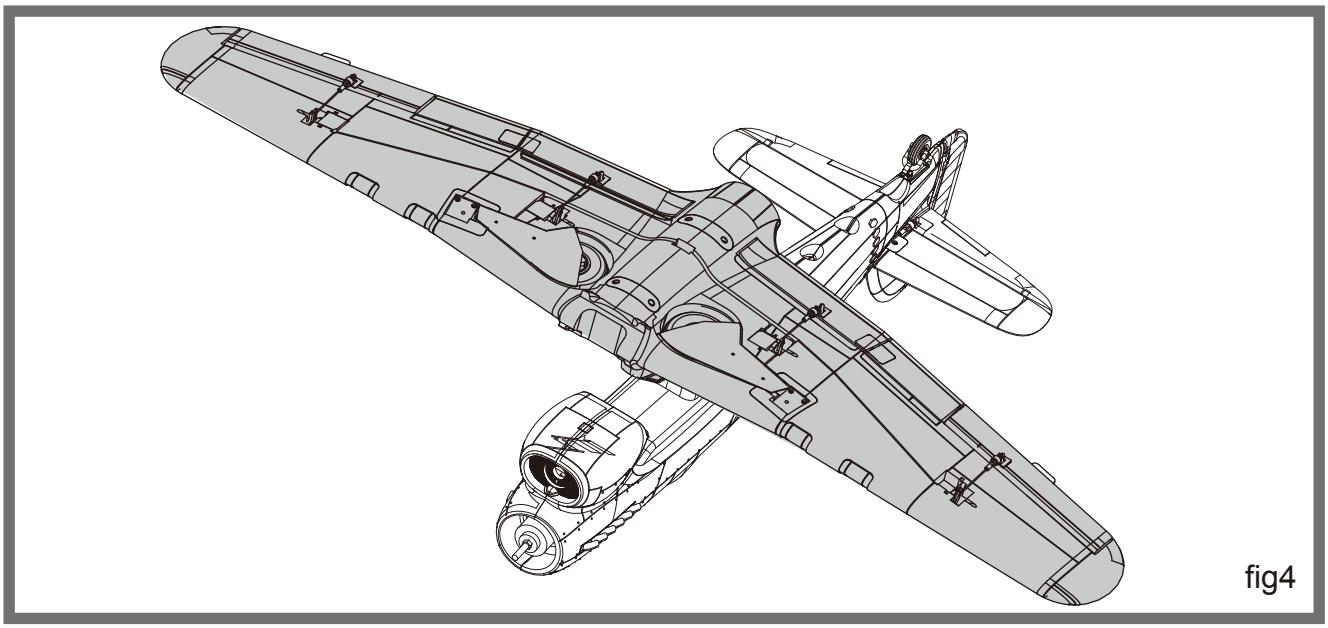
fig4

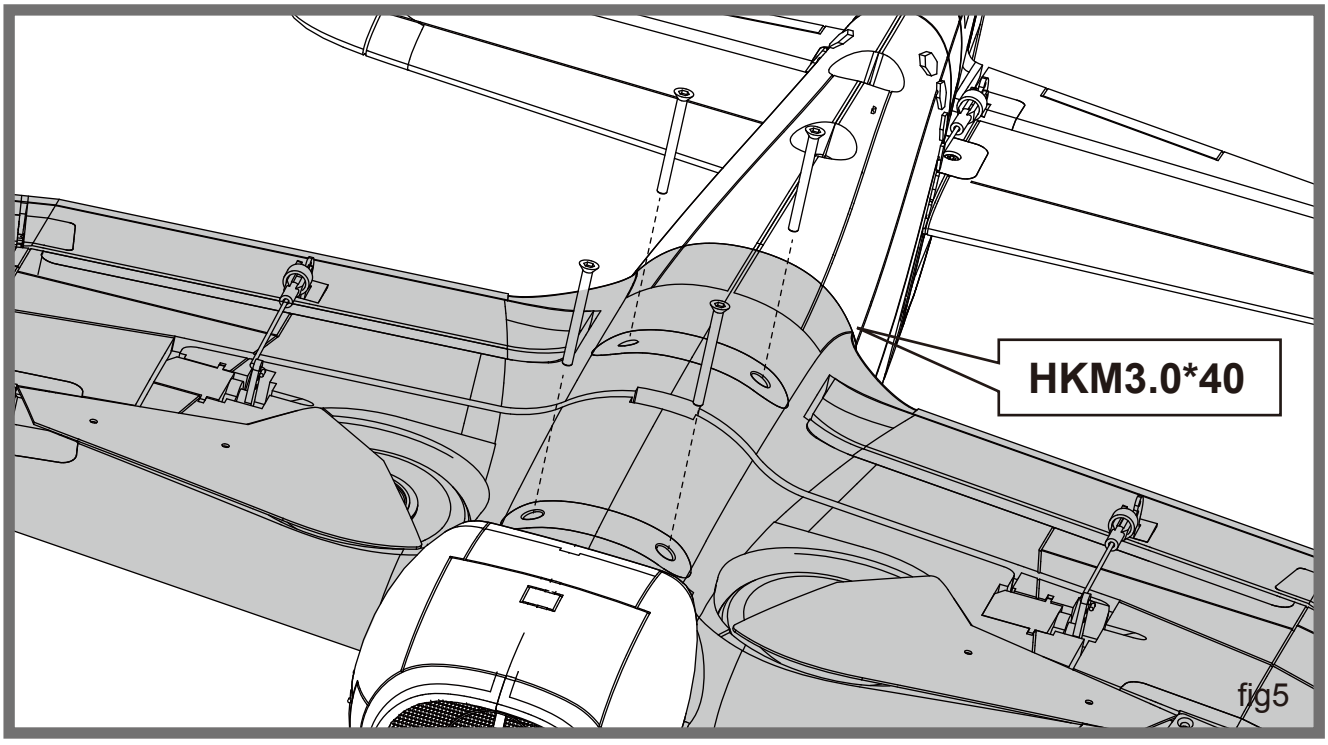

fig5

Install the battery and Radio installation

1. Apply the hook tape to the cable end of the battery (fig 6).
2. Make sure the battery is secured using the hook. Note: you may need to relocate the battery position to achieve the correct CG for your model.

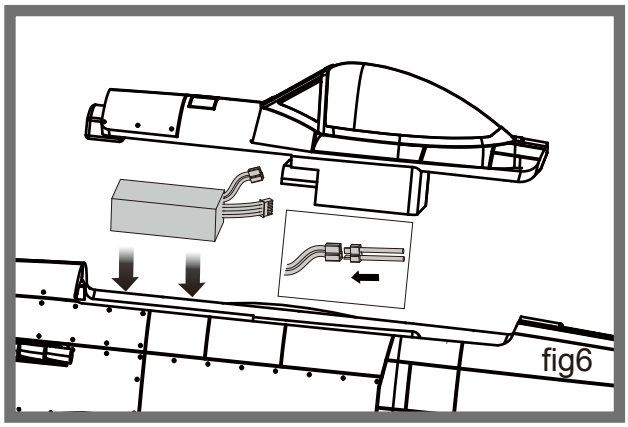

3. Connect the flaps, retracts and Aileron connector's wires to the Multi connectors then to the receiver. check the connection diagram below for more information.

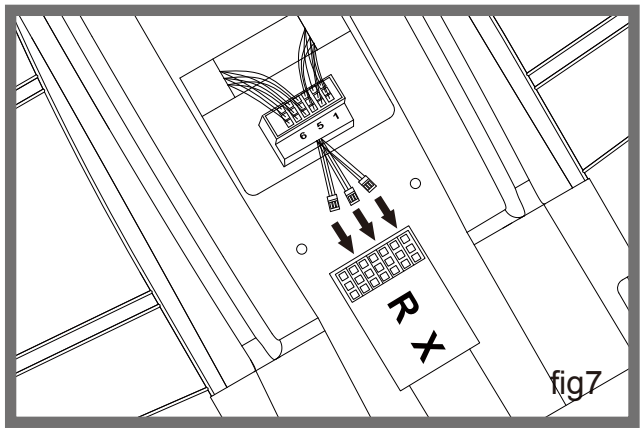

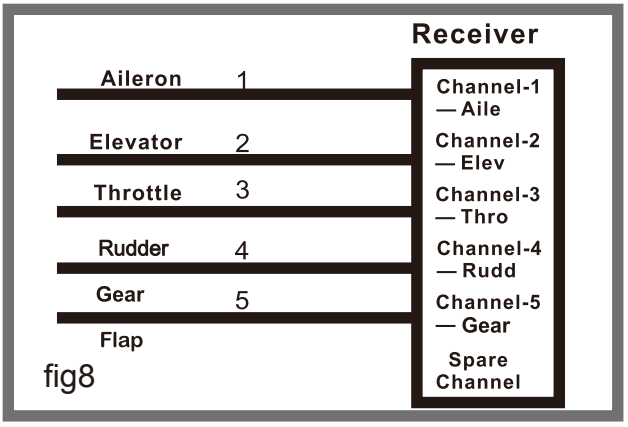

Get your model ready to fly

Important ESC and model information

1. The ESC included with the model has a safe start. If the motor battery is connected to the ESC and the throttle stick is not in the low throttle or position, the motor will not start until the throttle stick is moved to the low throttle or off position. Once the throttle stick is moved to the low throttle or off position, the motor will emit a series of beeps. Several beeps with the same tune means the ESC has detected the cells of the battery. The count of the beeps equals the cells of the battery. The motor is now armed and will start when the throttle is moved.
2. The motor and ESC come pre-connected and the motor rotation should be correct. If for any reason the motor is rotating in the wrong direction, simply reverse two of the three motor wires to change the direction of rotation.
3. The motor has an optional brake setting. The ESC comes with brake switched off and we recommend that the model be flown with the brake off. However, the brake could be accidentally switched on if the motor battery is connected to the ESC while the throttle stick is set at full throttle. To switch the brake off, move the throttle stick to full throttle and plug in the motor battery. The
motor will beep one time. Move the throttle stick to low throttle or the off position. The motor is ready to run and the brake will be switched off.
4. Battery Selection and Installation. We recommend the 11.1V 2200mAh 25C Li-Po battery. If using another battery, the battery must be at least a 11.1V 2200mAh 25C battery. Your battery should be approximately the same capacity, dimension and weight as the 11.1V 2200mAh 25C Li-Po battery to fit the fuselage without changing the center of gravity significantly.

The transmitter and model setup

Before getting started, bind your receiver with your transmitter. Please refer to your Transmitter Manual for proper operation
CAUTION: To prevent personal injury, DO NOT install the propeller assembly onto the motor shaft while testing the control surfaces. DO NOT arm the ESC and do not turn on the transmitter until the Transmitter Manual instructs you to do so.
Tips: Make sure all control sticks on your radio are in the neutral position (rudder, elevator, ailerons) and the throttle in the OFF position. Make sure both ailerons move up and down (travel) the same amount. This model tracks well when the left and right ailerons travel the same amount in response to the control stick.
1. Move the controls on the transmitter to make sure aircraft control surface move correctly. See diagrams below.

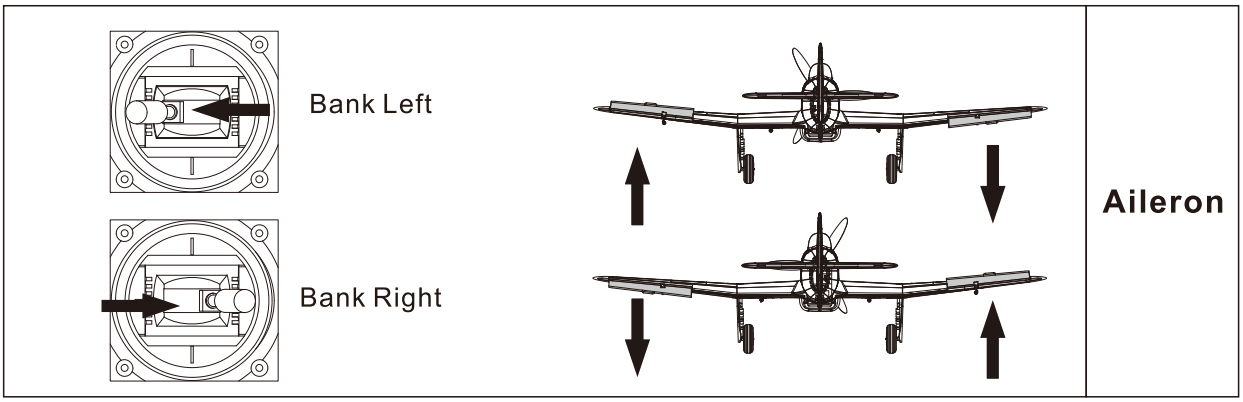

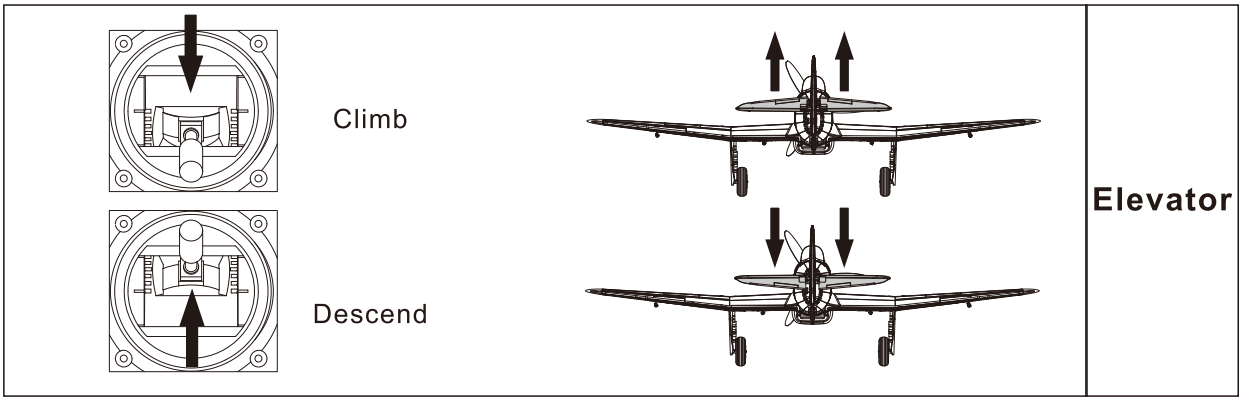

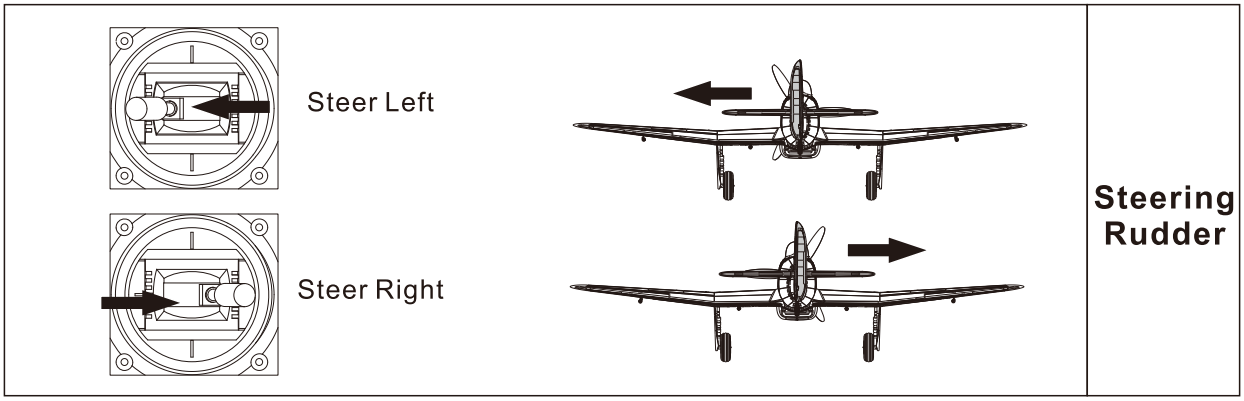

Check the control throws

The suggested control throw setting for FMS MODEL are as follows (dual rate setting):

	High Rate	Low Rate
Elevator	10mm up/down	8 mm up/down
Aileron	11mm up/down	8 mm up/down
Rudder	15mm left/right	12mm left/right

Tips: At first flight, fly the model in low rate. The first time you use high rates, be sure to fly at low to medium speeds. High rate, as listed, are listed, are only for EXTREME maneuvering.

Check the motor rotating direction

The motor should rotate clockwise when viewing the plane from the rear.

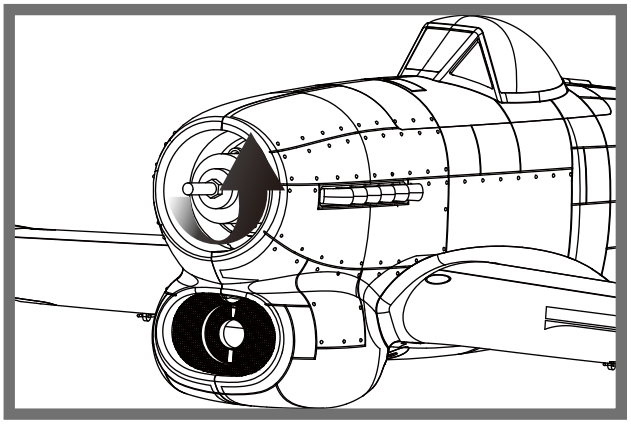

Clevis Installation

a. Pull the tube from the clevis to the linkage.
b. Carefully spread the clevis, then insert the clevis pin into the desired hole in the control horn.
c. Move the tube to hold the clevis on the control horn.

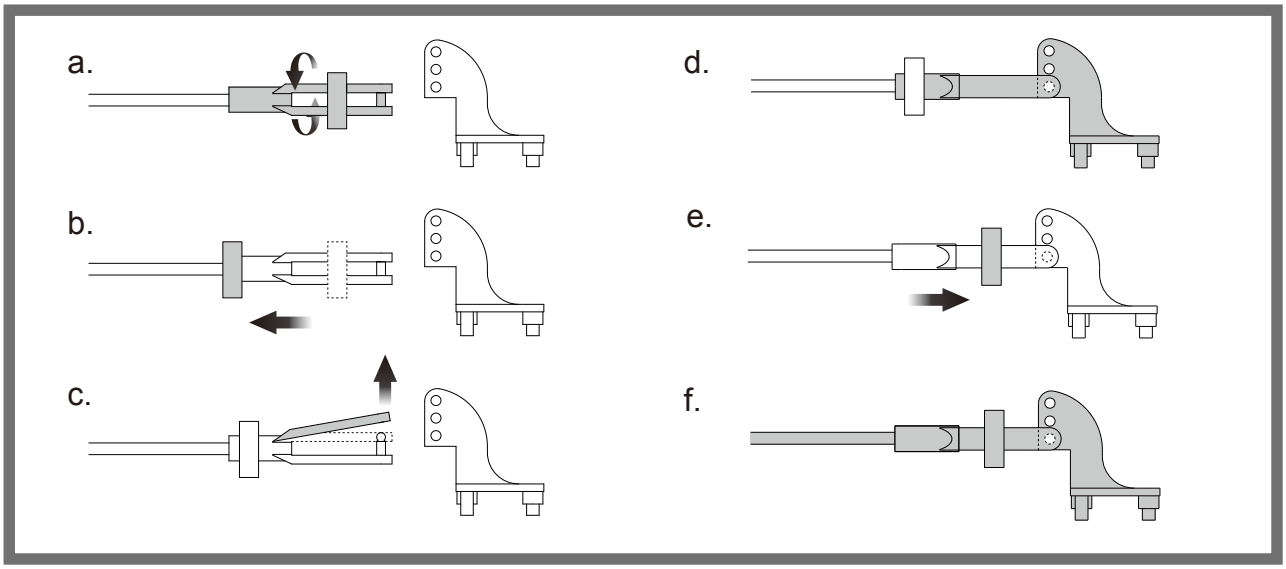

Control Horn and Servo Arm Settings

The table shows the factory settings for the control horns and servo arms. Fly the aircraft at the factory settings before making changes.
After flying, you may choose to adjust the linkage positions for the desired control response. See the table to the below

	Horns	Arms
Elevator	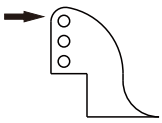	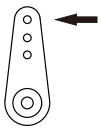
Rudder	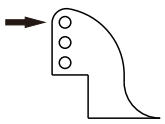	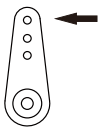
Ailerons	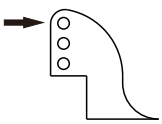	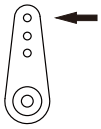

More control throw
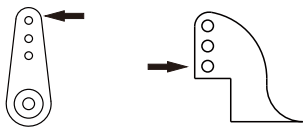
Less control throw
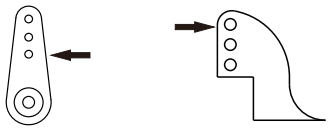

Install the propeller and spinner

Assemble the spinner and propeller as shown below.

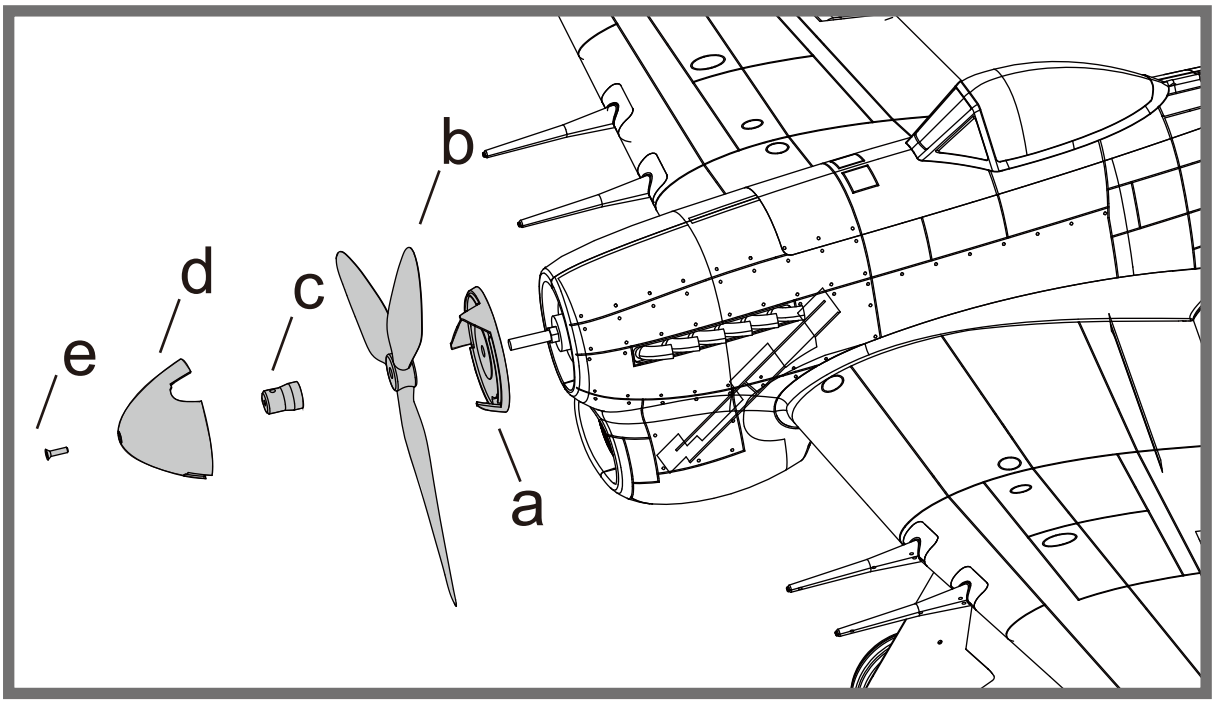

Check the C.G. (Center of Gravity)

When balancing your model, adjust the motor battery as necessary so the model is level or slightly nose down. This is the correct balance point for your model. After the first flights, the CG position can be adjusted for your personal preference.

1. The recommended Center of Gravity (CG) location for your model is (40-45mm) forward from the leading edge of the main wing (as shown) with the battery pack installed. Mark the location of the CG on top of the wing.
2. When balancing your model, support the plane at the marks made on the bottom of the main wing with your fingers or a commercially available balancing stand. This is the correct balance point for your model. Make sure the model is assembled and ready for flight before balancing.

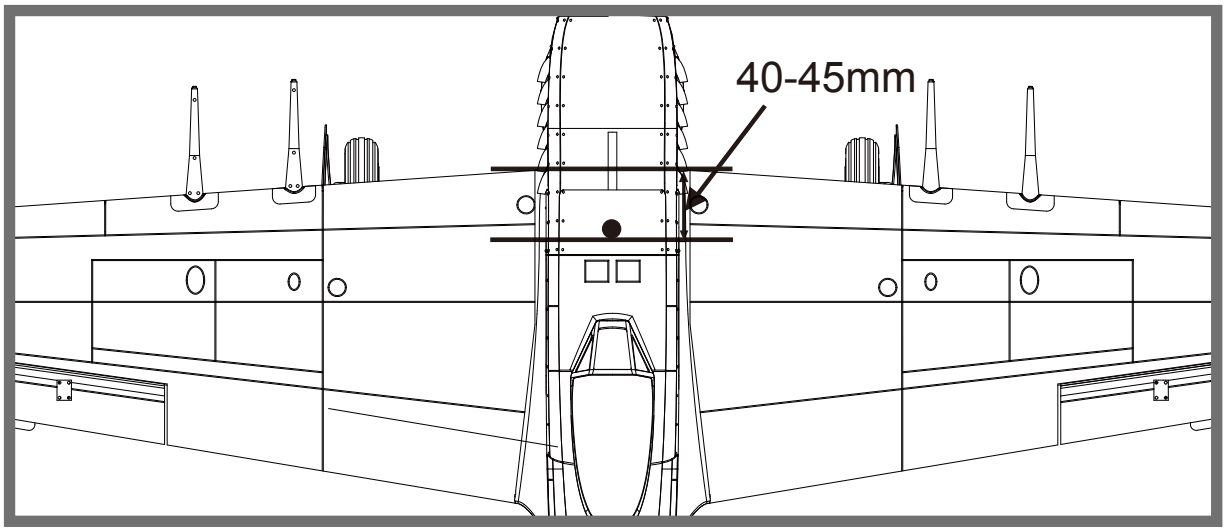

Before flying the model

Find a suitable flying site

Find a flying site clear of buildings, trees, power lines and other obstructions. Until you know how much area will be required and have mastered flying your plane in confined spaces, choose a site which is at least the size of two to three football fields - a flying field specifically for R/C planes is best. Never fly near people - especially children who can wander unpredictably.

Perform the range check for your plane

As a precaution, an operational ground rage test should be performed before the first flight each time you go out. Performing a rang test is a good way to detect problems that could cause loss of control such as low batteries, defective or damaged radio components, or radio interference. This usually requires an assistant and should be done at the actual flying site you will be using.

First turn on the transmitter, then install a fully - charged battery into the fuselage. Connect the battery and install the hatch.

Remember, use care not to bump the throttle stick. otherwise, the propeller/fan will turn and possibly cause damage or injury.

Note: Please refer to your Transmitter Manual that came with your radio control system to perform a ground range check. If the controls are not working correctly or if anything seems wrong, do not fly the model until you correct the problem. Make certain all the servo wires are securely connected to the receiver and the transmitter batteries have a good connection.

Monitor your flight time

Monitor and limit your flight time using a timer (such as on a wristwatch or in your transmitter if available). When the batteries are getting low you will usually notice a performance drop before the ESC cuts off motor power, so when the plane starts flying slower you should land. Often (but not always) power can be briefly restored after the motor cuts off by holding the throttle stick all the way down for a few seconds.
To avoid an unexpected dead-stick landing on your first flight, set your timer to a conservative 4 minutes. When your alarm sounds you should land right away.

Flying course

Take off

While applying power, slowly steer to keep the model straight. the model should accelerate quickly. As the model gains flight speed you will want to climb at a steady and even rate. Typhoon will climb out at a nice angle of attack (AOA).

Flying

Always choose a wide-open space for flying your plane. It is ideal for you to fly at a sanctioned flying field. If you are not flying at an approved site always avoid flying near houses, trees, wires and buildings. You should also be careful to avoid flying in areas, where there are many people, such as busy parks, schoolyards, or soccer field. Consult laws and ordinances before choosing a location to fly your aircraft. After takeoff, gain some altitude. Climb to a aspects of flight does not make sense, including high speed passes, inverted flight, loops, and point rolls.

Landing

Land the model when you hear the motor pulsing (LVC) or if you notice a reduction in power. If using a transmitter with a timer, set the timer so you have enough flight time to make several landing approaches.
Recharge the battery and repair the model as needed .The model's three point landing gear allows the model to land on hard surfaces. Align model directly into the wind and fly down to the ground. Fly the airplane down to the ground using 1/4-1/3 throttle to keep enough energy for proper flare. Before the model touches done, always fully decrease the throttle to avoid damaging the propeller or other components. The key to a great landing is to manage the power and elevator all the way to the ground and set down lightly on the main landing gear. After a few flights you will find the model can be set down lightly on the mains and you can hold the nose wheel off balancing the model on the mains until it slows and gently settles the nose.

Maintenance

Repairs to the foam should be made with foam safe adhesives such as hot glue, foam safe CA, and 5min epoxy. When parts are not repairable, see the Spare Parts List for ordering by item number.
Always check to make sure all screws on the aircraft are tightened. Pay special attention to make sure the spinner is firmly in place before every flight.

Troubleshooting

Problem	Possible Cause	Solution
Aircraft will not respond to the throttle but responds to other controls.	- ESC is not armed. - Throttle channel is reversed.	- Lower throttle stick and throttle trim to lowest settings. - Reverse throttle channel on transmitter.
Extra propeller noise or extra vibration.	- Damaged spinner, propeller, motor, or motor mount. - Loose propeller and spinner parts. - Propellor installed backwards.	- Replace damaged parts. - Tighten parts for propeller adapter, propeller and spinner.
Reduced flight time or aircraft underpowered.	- Flight battery charge is low. - Propeller installed backward. - Flight battery damaged.	- Remove and install propeller correctly. - Completely recharge flight battery. - Replace flight battery and follow flight battery instructions.
Control surface does not move, or is slow to respond to control inputs.	- Control surface, control horn, linkage or servo damage. - Wire damaged or connections loose.	- Replace or repair damaged parts and adjust controls. - Do a check of connections for loose wiring.
Controls reversed.	Channels are reversed in the transmitter.	Do the Control Direction Test and adjust controls for aircraft and transmitter.
- Motor loses power. - Motor power pulses then motor loses power.	- Damage to motor, or battery. - Loss of power to aircraft. - ESC uses default soft Low Voltage Cutoff(LVC).	- Do a check of batteries, transmitter, receiver, ESC, motor and wiring for damage (replace as needed). - Land aircraft immediately and recharge flight battery.
LED on receiver flashes slowly.	Power loss to receiver.	- Check connection from ESC to receiver. - Check servos for damage. - Check linkages for binding.

Spare parts list content

FMSPO101	Fuselage
FMSPO102	Main Wing Set
FMSPO103	Horizontal Stabilizer
FMSPO104	Cockpit
FMSPO105	Spinner
FMSPO106	Cannon
FMSPO107	Main Landing Gear Set
FMSPO108	Main Landing Gear System
FMSPO109	Rear Landing Gear Set
FMSPO110	Linkage Rod
FMSPO111	Screw Set
FMSPO112	Pipe
FMSPO113	Decal Sheet
FMSPO114	E-retract
FMSPROP032	Propeller
FMSDJ009	Motor Mount
FMSDZ010	Motor Shaft
FMSBM011	Motor Board
FMSCON002	Multi-connector Set
FMSKV850	Motor
PRESC001	40A ESC
FMSSER9GP	Servo

Visit our website to see photos of this product: www.fmsmodel.com

ESC instruction

Wires Connection:

The electronic speed controller can be connected to the motor by soldering directly, or with high quality connectors.
Always use new connectors, which should be soldered carefully to the cables and insulated with heat shrink tubes.
The maximum length of the battery pack wires shall be within 6 inches.

- Solder controller to the motor wires.
- Solder appropriate connectors to the battery wires.
- Insulate all solder connectors with heat shrink tubes.
- Plug the "JR" connector into the receiver throttle channel.
- Speed Controller Red and Black wires connect to battery pack Red and Black wires respectively.

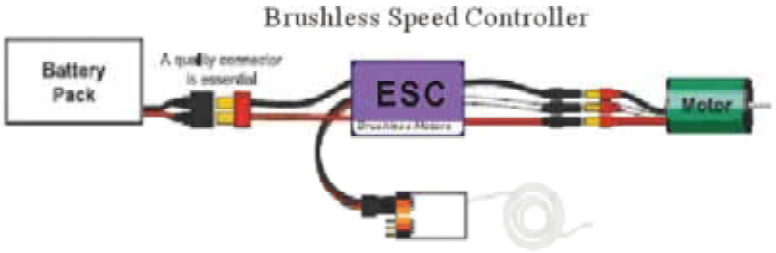

Programming Mode Audible Tones

Programming Mode Audible Tones	ESC Functions
0 Throttle Calibration (within the first 4 Sec) ● ● ● ●	
1 Brake	
_ * _ * _ * _ *	Brake On /Off
2 Battery type	
~ ~ ~ ~	NiCad
~~ ~~ ~~ ~~	LiPo
3 Low Voltage Cutoff Threshold	
* _ * _ * _ * _ * _ * _ * _ * _	Low2.8V/50%
* _ _ * _ * _ _ * _ * _ _ * _ * _ _	Medium3.0V/60%
* _ _ _ _ * _ _ _ _ * _ _ _ _ * _ _ _ _ *	High3.2V/65%
4 Restore Factory Setup Defaults	
— — — —	Restore
5 Timing Setup	
_ _ _ _	Automatic (7-30°)
_ _ _ _ _ _ _ _	Low (7-22°)
_ _ _ _ _ _ _ _ _ _ _ _	High (22-30°)
6 Soft Acceleration Start Ups	
V V V V V V V V	Very Soft
V V V V	Soft Acceleration
V V V V V V V V V V V V	Start Acceleration
7 Governor Mode	
_ * _ * _ * _ * _ *	Rpm off
_ ** _ ** _ ** _ ** _ **	Heli first range
_ *** _ *** _ *** _ *** _ ***	Heli second range
8 Motor Rotation	
W W W W	Positive/Reverse
9 Switching Frequency	
// // // //	8kHz
\\ \\ \\ \\	16kHz
10 Low Voltage Cutoff Type	
_ ☒ ☒ ☒ ☒	Reduce Power
☒ _ ☒ _ ☒ _ ☒ _	Hard Cut Off

MADE IN CHINA