KOMBINI DSHOT VERSION

Flight controller

USER MANUAL

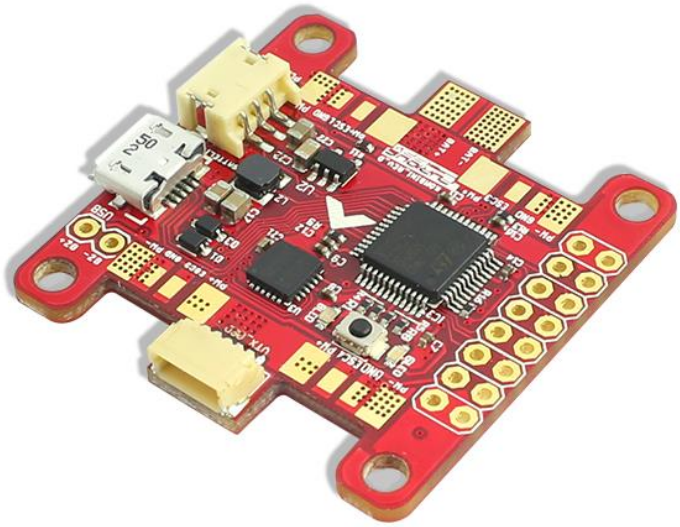

Please contact us if you need further assistance:
Tech support: tech@furiousfpv.com
Sales support: sales@furiousfpv.com
Website: http://furiousfpv.com/

Introduction

Designed nothing short of revolutionary, the Furious KOMBINI Flight Controller steps up the competition with feature packed insanity that is ready to alter your FPV world.

Unlike any other system available today, the Furious KOMBINI provides an all in one solution that brings forth the ultimate in simplified sophistication. This all encompassing FC solution utilizes industry leading technology that has never been seen in a system this compact and powerful - the ultimate end game for high powered FPV flight.

Cluttered & complex wiring? Never again. With an industry 1st gold plated PDB that is integrated within, the KOMBINI FC provides the ultimate in soldering ease with the highest grade of connectivity, allowing direct soldering points for motors, VTx, Receiver and FPV Camera. Rated with 150A of current protection @ 5S 18.5V input power, the KOMBINI is ready to push the boundaries of aggressive FPV flight.

Utilizing the very latest F3 chip processor with built in BetaFlight firmware, the Furious KOMBINI utilizes industry leading components with an included LC filter for the very best in signal reception. Add the 1A 5V BEC with a built in Sbus inverter & Spektrum satellite port, and the KOMBINI FC stand alone amongst all the rest with a potent blend of race ready madness.

Sized at 36mm x 36mm, the compact footprint of the KOMBINI FC is the perfect application of race ready aggression, providing a flight controller experience second to none. This adhesion of performance, capability & simplicity is the apex of FPV flight, providing the end user with a flight experience that brings everything to the table in a zero compromise design.

For the pinnacle in simplicity, performance and cutting edge capability, the Furious KOMBINI is the feature packed FC system that is ready and waiting to dominate. Get yours today, and change the way you FPV.

WHAT'S NEW KOMBINI DSHOT VERSION?

- Remove PPM pin and add TX3 pin For the pinnacle in simplicity, performance
- Ready support Dshot protocol
- New component for BEC better
- New red color for PCB

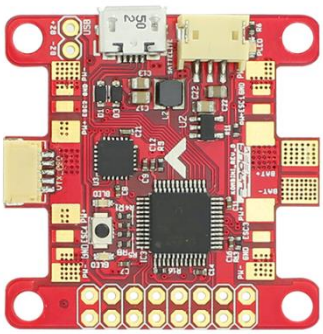

Feature

- Latest Generation F3 Processor Chip
- Simplicity Defined with Built In PDB
- Massive 150A PDB Current Protection
- LC Filter & 12v
- 800mA BEC for VTX

- 5S 18.5V Ready
- Heavy Duty 2A BEC @ 5V and 0.8A BEC @12V Output
- Ultra Compact Design for Ease of Installation
- Gold Plated Pads for the Very Best Connectivity
- Firmware Perfection via BetaFlight
- BLHeli Pass Through Setup
- Compact Sizing w/ 30.5mm x 30.5mm Mounting Holes
- Included Spektrum Satellite Port
- FrSky Telemetry, Ready & Waiting
- Full USB Support
- MPU6000 SP1 Chip
- Weight: 7gr

Board Layout

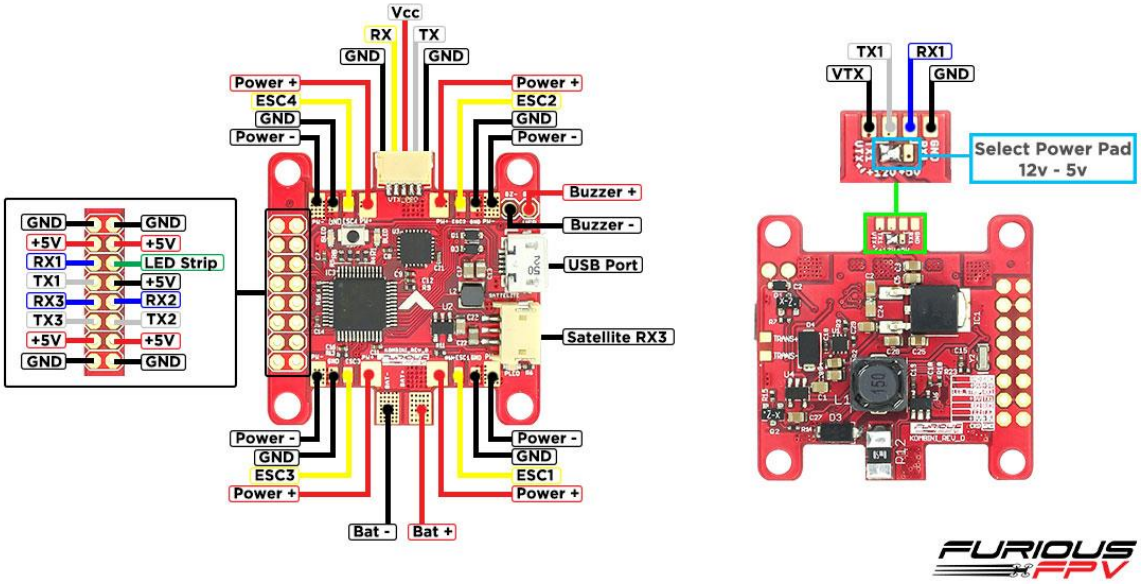

Dimensions

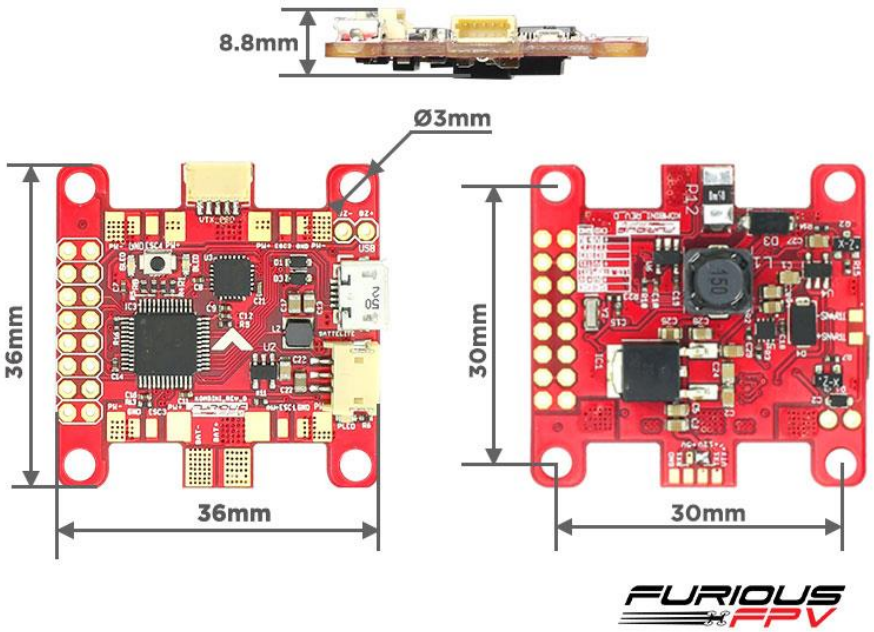

Connections

*** Warning:** Kombini DShot Version can support up to 5s Lipo battery but make sure other devices also support it.

Connect with Receiver:

- **Using XSR FrSky Receiver**

Port Identifier	Configuration	Serial Rx	Telemetry Output	Sensor Input
USB VCP	MSP 115200	Serial RX	Disabled AUTO	Disabled AUTO
UART1	MSP 115200	Serial RX	Disabled AUTO	Disabled AUTO
UART2	MSP 115200	Serial RX	SmartPort AUTO	Disabled AUTO
UART3	MSP 115200	Serial RX	Disabled AUTO	Disabled AUTO

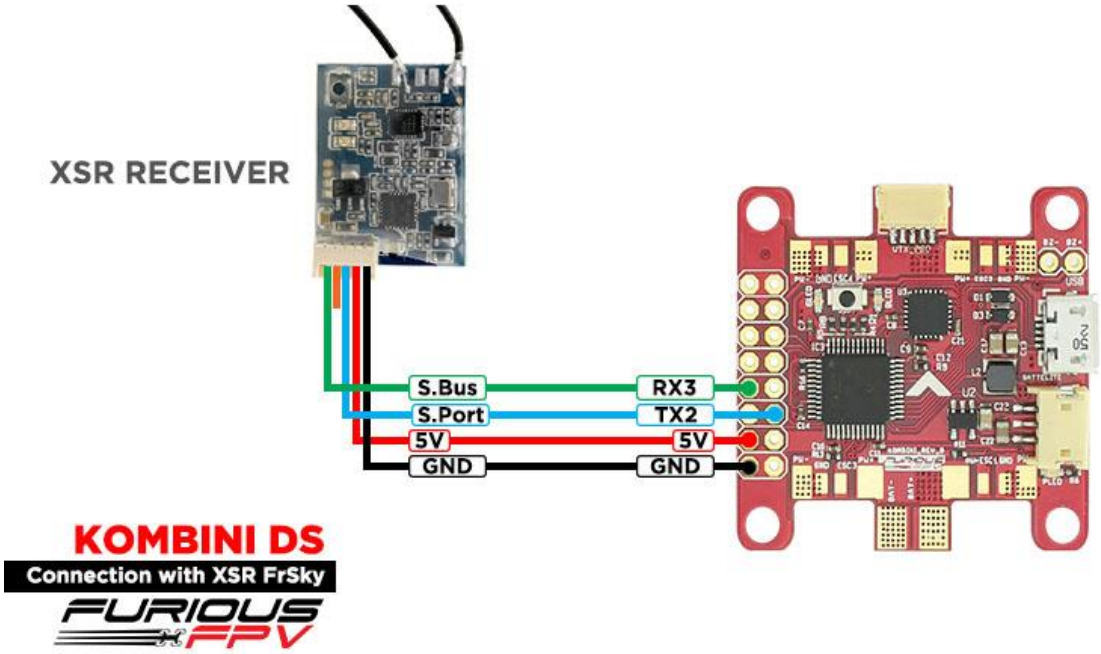

- **Using SPD15 Receiver**

Port Identifier	Configuration	Serial Rx	Telemetry Output	Sensor Input
USB VCP	MSP 115200	Serial RX	Disabled AUTO	Disabled AUTO
UART1	MSP 115200	Serial RX	Disabled AUTO	Disabled AUTO
UART2	MSP 115200	Serial RX	SmartPort AUTO	Disabled AUTO
UART3	MSP 115200	Serial RX	Disabled AUTO	Disabled AUTO

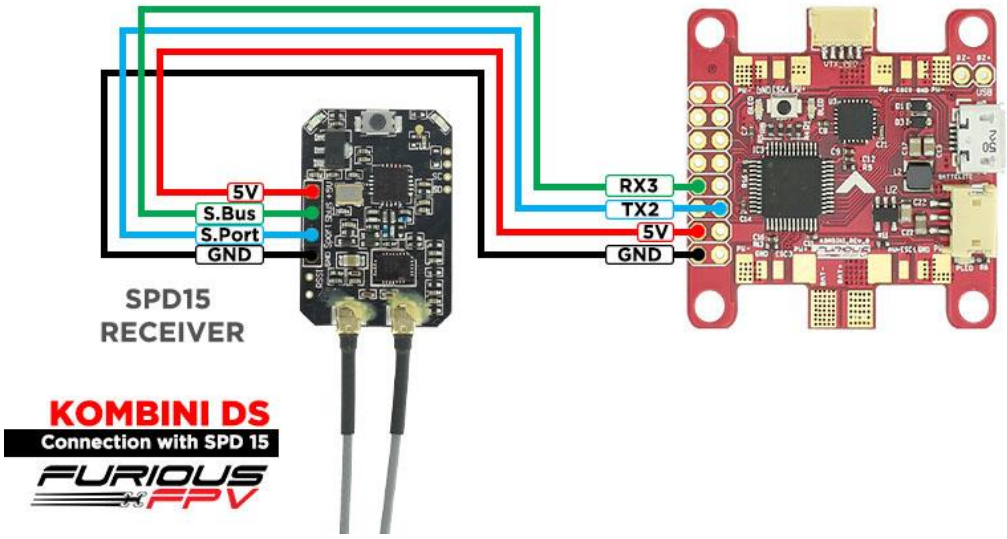

- **Using Spektrum Satellite Receiver**

Port Identifier	Configuration	Serial Rx	Telemetry Output	Sensor Input
USB VCP	MSP 115200	Serial RX	Disabled AUTO	Disabled AUTO
UART1	MSP 115200	Serial RX	Disabled AUTO	Disabled AUTO
UART2	MSP 115200	Serial RX	Disabled AUTO	Disabled AUTO
UART3	MSP 115200	Serial RX	Disabled AUTO	Disabled AUTO

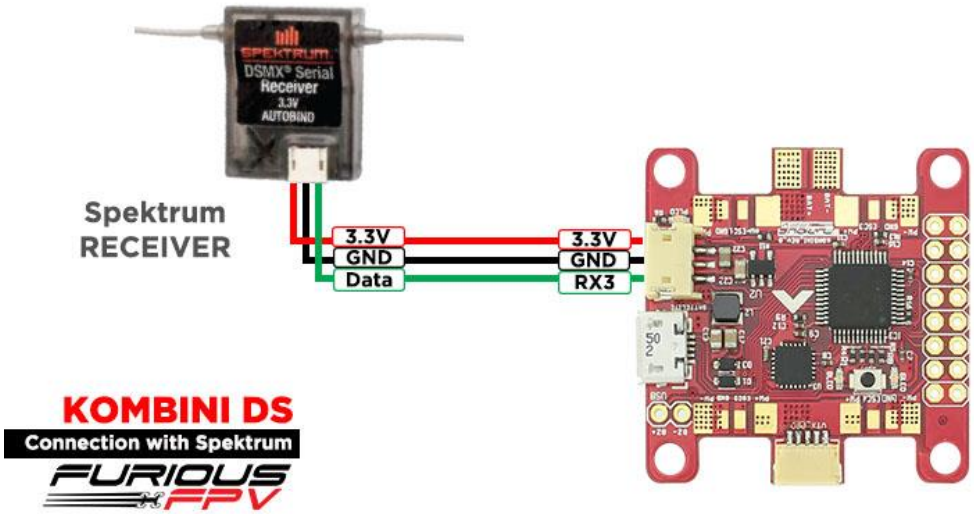

Connect with Video Transmitter:

*** Warning:** Kombini DShot Version can support up to 5s Lipo battery but make sure other devices also support it.

- **Using Tramp HV**

With Piggy V2 OSD

Ports

Note: not all combinations are valid. When the flight controller firmware detects this the serial port configuration will be reset.
Note: Do NOT disable MSP on the first serial port unless you know what you are doing. You may have to reflash and erase your configuration if you do.

Port Identifier	Configuration	Serial Rx	Telemetry Output	Sensor Input	Peripherals
USB VCP	MSP 115200	Serial RX	Disabled AUTO	Disabled AUTO	Disabled AUTO
UART1	MSP 115200	Serial RX	Disabled AUTO	Disabled AUTO	Disabled AUTO
UART2	MSP 115200	Serial RX	Disabled AUTO	Disabled AUTO	Disabled AUTO
UART3	MSP 115200	Serial RX	Disabled AUTO	Disabled AUTO	Disabled AUTO

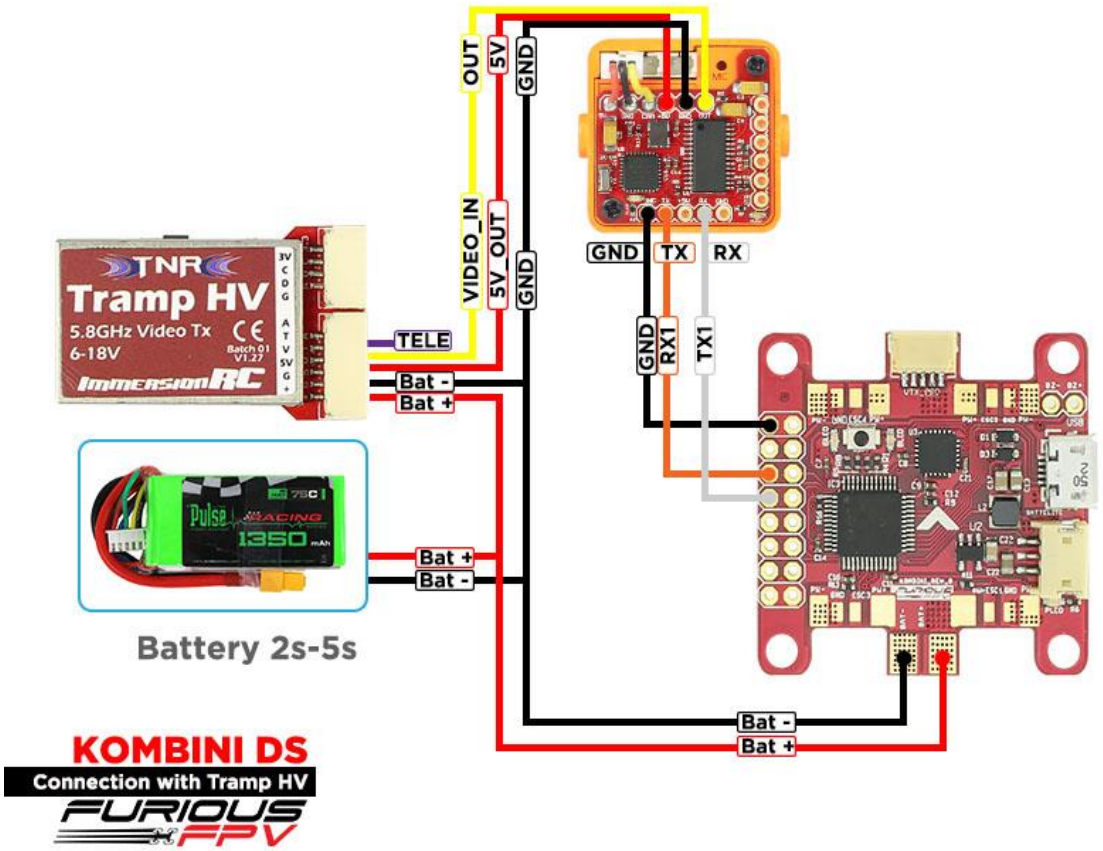

With Only Camera

Ports

Note: not all combinations are valid. When the flight controller firmware detects this the serial port configuration will be reset.
Note: Do NOT disable MSP on the first serial port unless you know what you are doing. You may have to reflash and erase your configuration if you do.

Port Identifier	Configuration	Serial Rx	Telemetry Output	Sensor Input	Peripherals
USB VCP	MSP 115200	Serial RX	Disabled AUTO	Disabled AUTO	Disabled AUTO
UART1	MSP 115200	Serial RX	Disabled AUTO	Disabled AUTO	Disabled AUTO
UART2	MSP 115200	Serial RX	Disabled AUTO	Disabled AUTO	Disabled AUTO
UART3	MSP 115200	Serial RX	Disabled AUTO	Disabled AUTO	Disabled AUTO

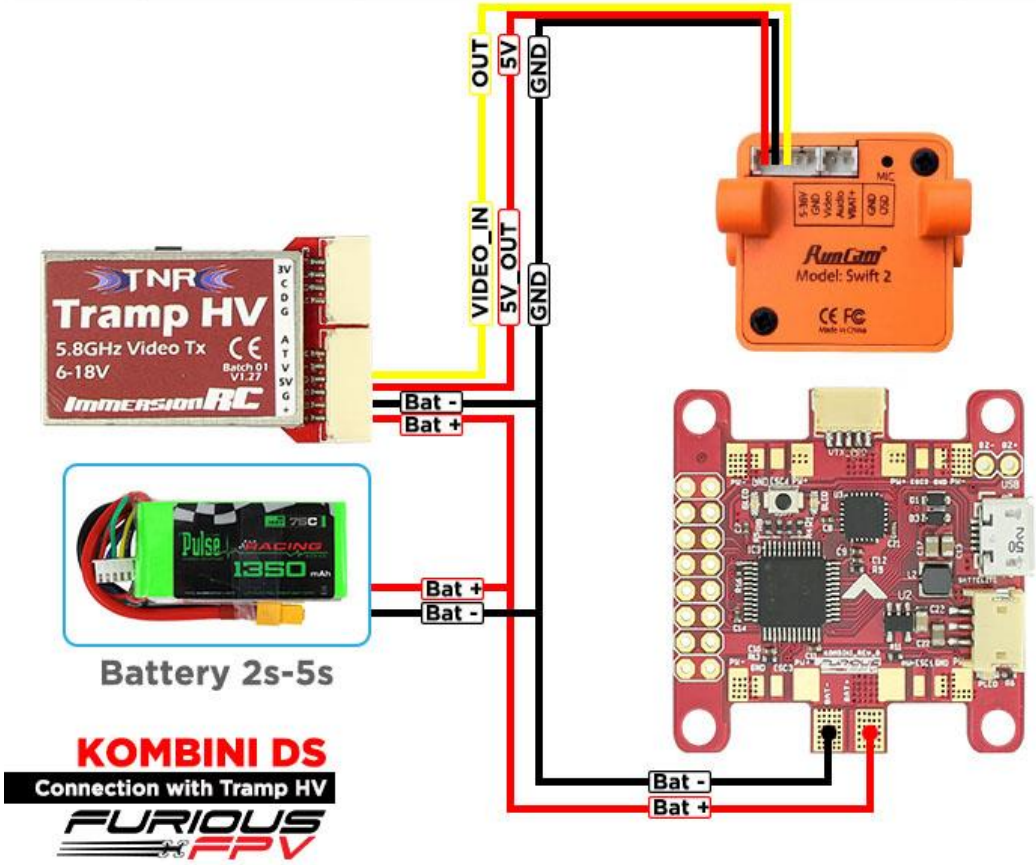

- **Using TBS Unify Pro**

With Piggy V2 OSD

Ports

Note: not all combinations are valid. When the flight controller firmware detects this the serial port configuration will be reset.
Note: Do NOT disable MSP on the first serial port unless you know what you are doing. You may have to reflash and erase your configuration if you do.

Port Identifier	Configuration	Serial Rx	Telemetry Output	Sensor Input	Peripherals
USB VCP	MSP 115200	Serial RX	Disabled AUTO	Disabled AUTO	Disabled AUTO
UART1	MSP 115200	Serial RX	Disabled AUTO	Disabled AUTO	Disabled AUTO
UART2	MSP 115200	Serial RX	Disabled AUTO	Disabled AUTO	Disabled AUTO
UART3	MSP 115200	Serial RX	Disabled AUTO	Disabled AUTO	Disabled AUTO

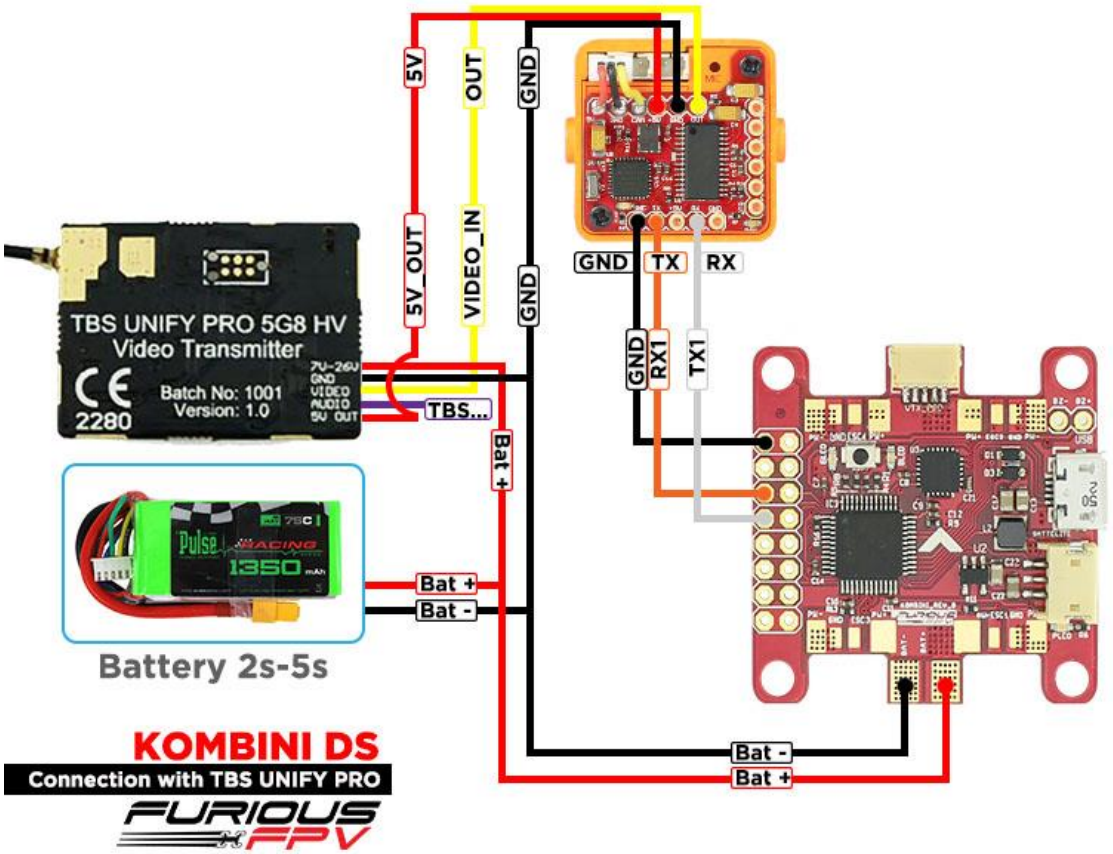

With Only Camera

Ports

Note: not all combinations are valid. When the flight controller firmware detects this the serial port configuration will be reset.
Note: Do NOT disable MSP on the first serial port unless you know what you are doing. You may have to reflash and erase your configuration if you do.

Port Identifier	Configuration	Serial Rx	Telemetry Output	Sensor Input	Peripherals
USB VCP	MSP 115200	Serial RX	Disabled AUTO	Disabled AUTO	Disabled AUTO
UART1	MSP 115200	Serial RX	Disabled AUTO	Disabled AUTO	Disabled AUTO
UART2	MSP 115200	Serial RX	Disabled AUTO	Disabled AUTO	Disabled AUTO
UART3	MSP 115200	Serial RX	Disabled AUTO	Disabled AUTO	Disabled AUTO

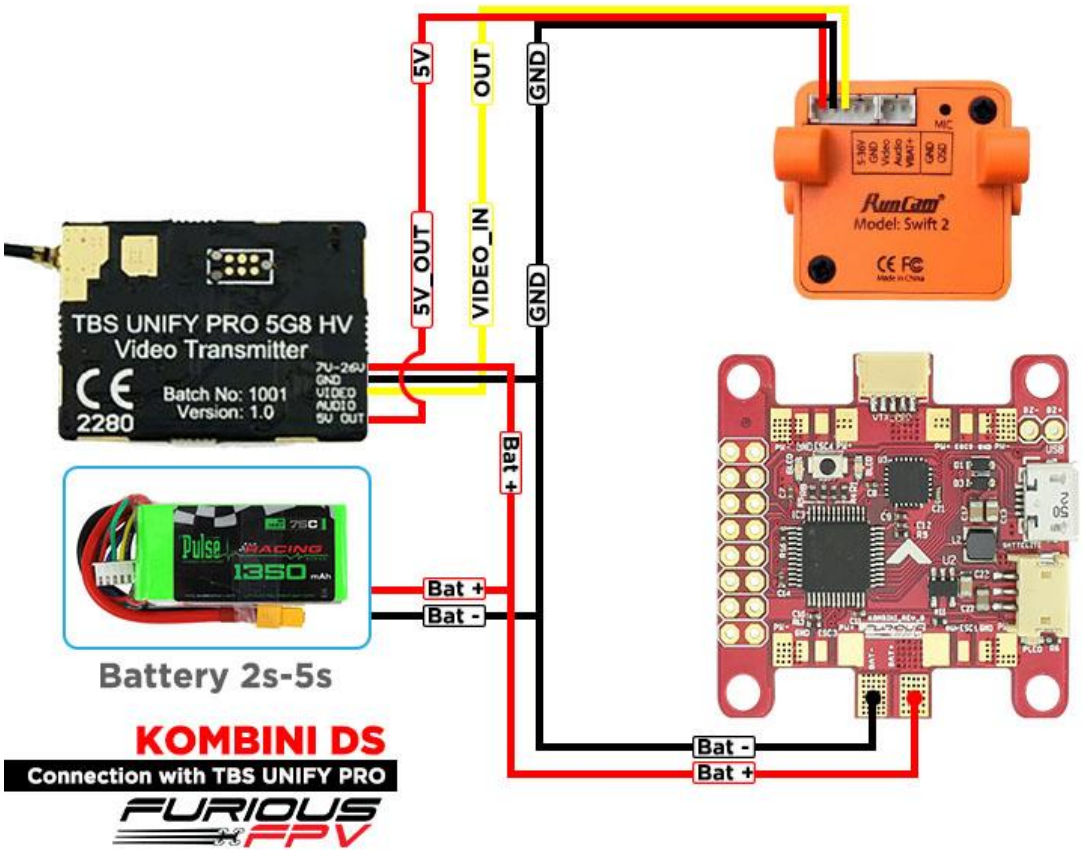

- **Using FX FX799T**

With Piggy V2 OSD

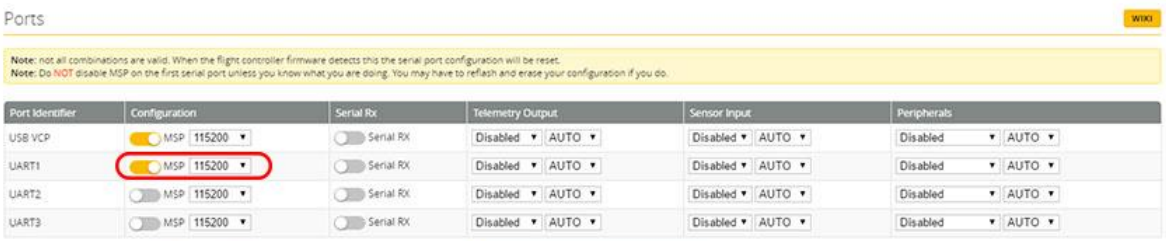

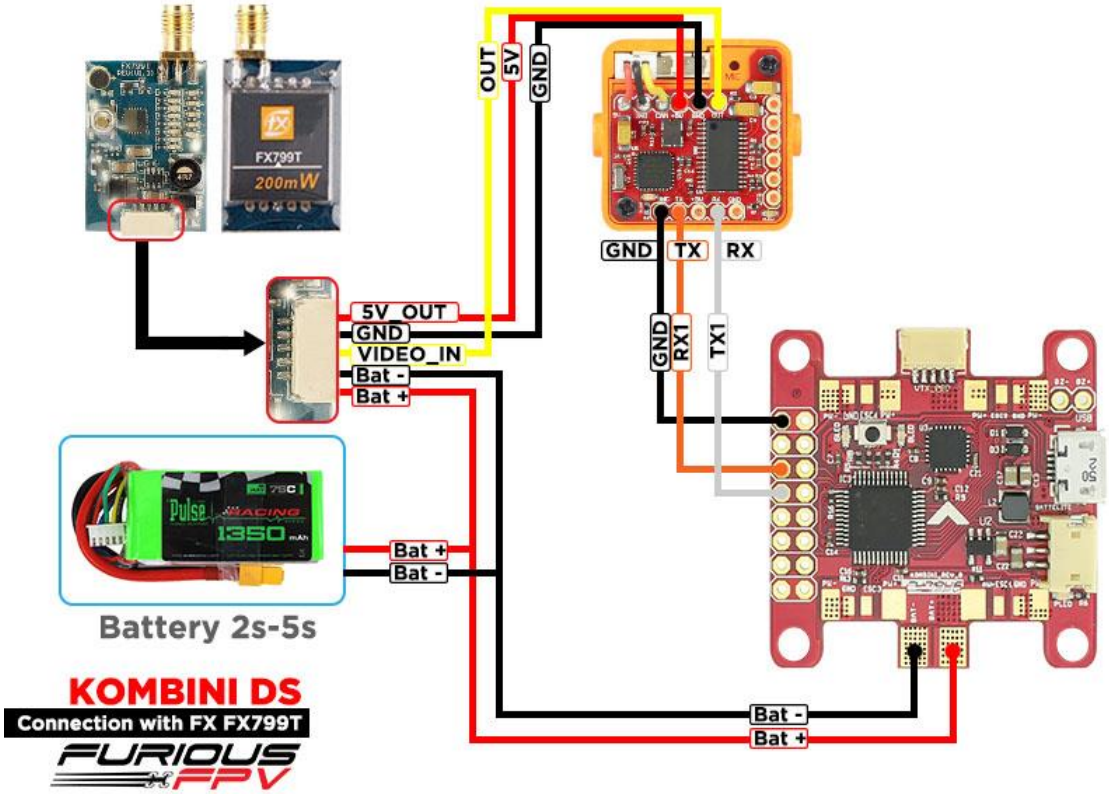

With Only Camera

Ports

Note: not all combinations are valid. When the flight controller firmware detects this the serial port configuration will be reset.
Note: Do NOT disable MSP on the first serial port unless you know what you are doing. You may have to reflash and erase your configuration if you do.

Port Identifier	Configuration	Serial Rx	Telemetry Output	Sensor Input	Peripherals
USB VCP	MSP 115200	Serial RX	Disabled AUTO	Disabled AUTO	Disabled AUTO
UART1	MSP 115200	Serial RX	Disabled AUTO	Disabled AUTO	Disabled AUTO
UART2	MSP 115200	Serial RX	Disabled AUTO	Disabled AUTO	Disabled AUTO
UART3	MSP 115200	Serial RX	Disabled AUTO	Disabled AUTO	Disabled AUTO

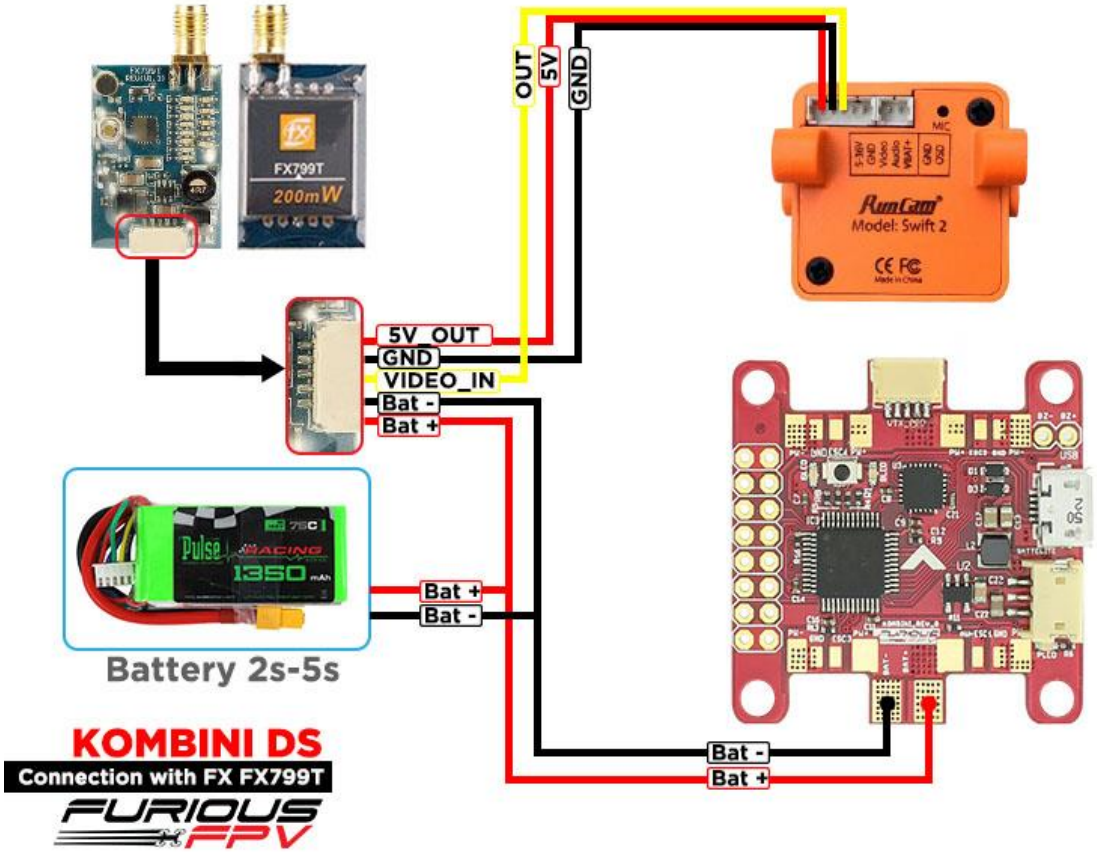

Connect with other devices:

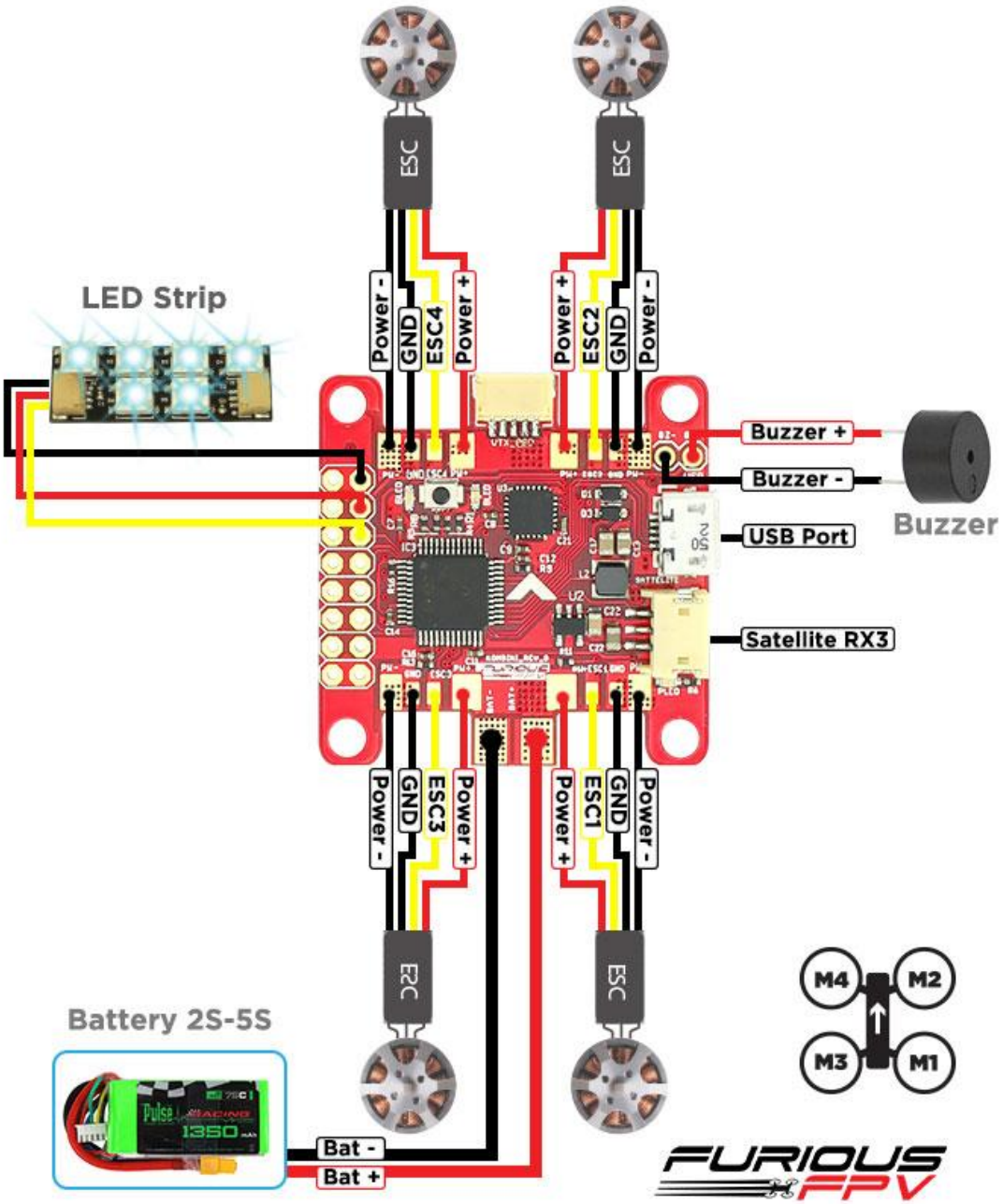

Connect with ESC 4 in 1 Aikon SEFM 30A:

You can buy ESC Aikon SEFM 30 4 in 1 right here: https://goo.gl/IOYBEr

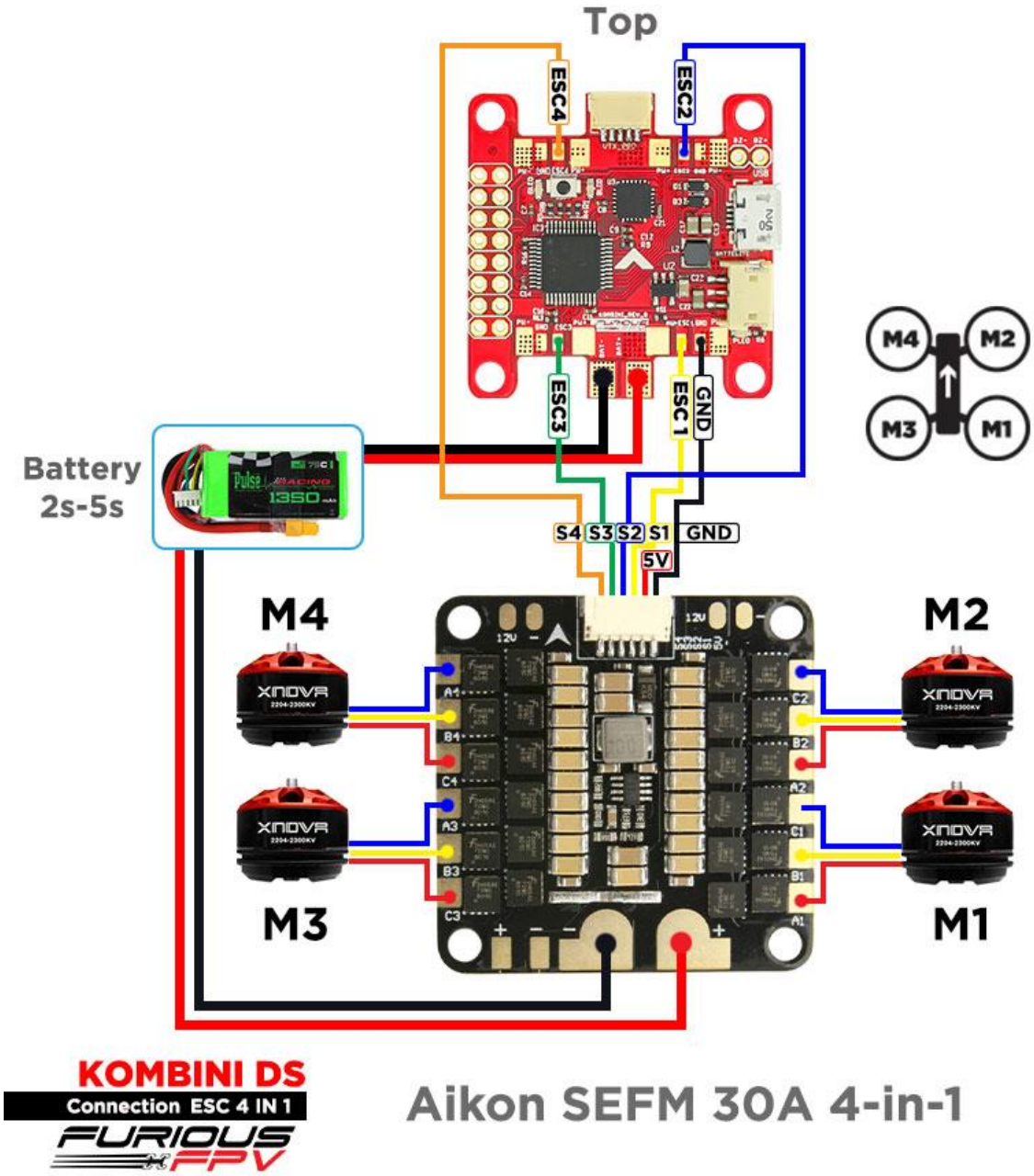

Connect with ESC 4 in 1 Cicada 35x4 35A:

You can buy ESC Sunrise Cicada 35x4 35A right here: https://goo.gl/s08OaI

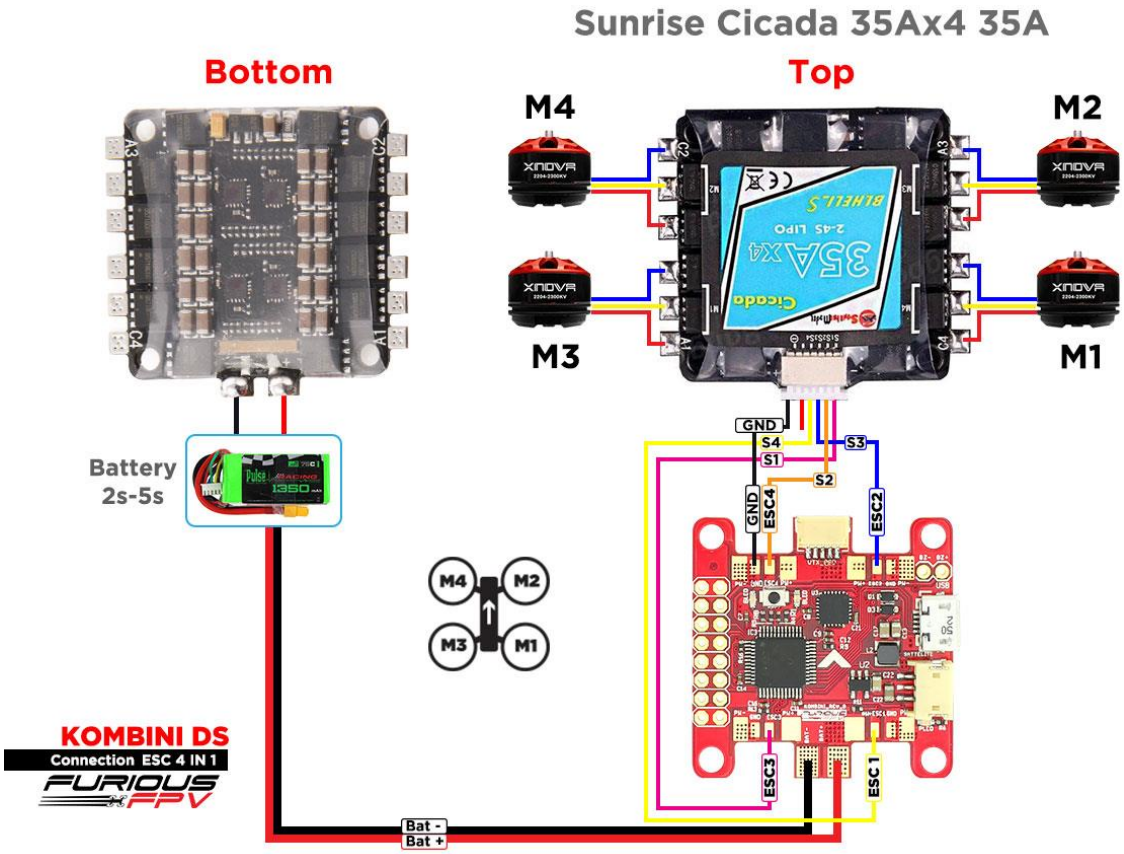

Basic setup

Please, follow carefully these next steps, and always **remove** your propellers when you're configuring your quad

Step 1: Plug USB cable and **connect** Kombini with the computer then **open** BetaFlight

Step 2: Configure **Ports.**

(1) Turn on **MSP** of **UART 1** to use OSD.
(2) Turn on **Serial Rx** of **UART 3** to use **Receiver Mode**
(3) Select **SmartPort** of **UART 2** to use **S.Port** of **Receiver**.

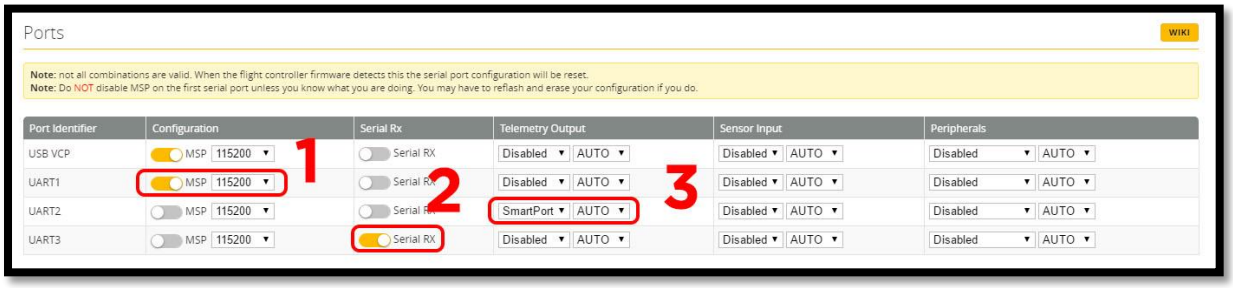

* **Note:** Please check in connection to correct select for this function.

Step 3: Go to **Configuration** and choose **ESC/Motor** protocol in ESC/Motor Features

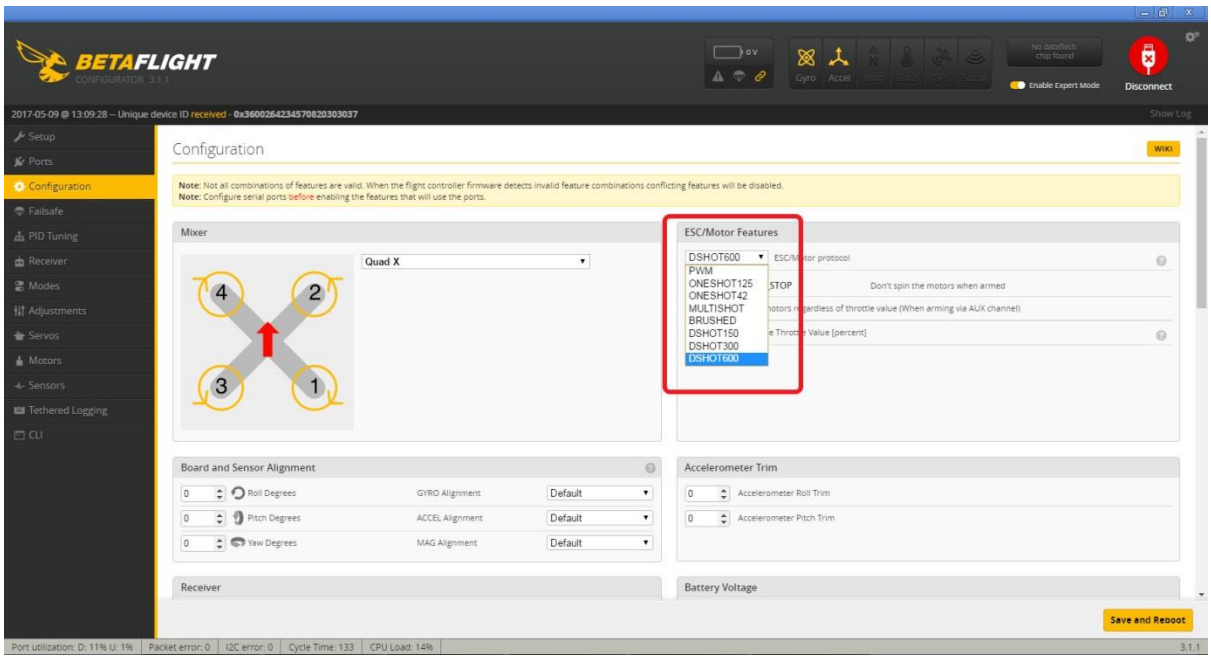

Step 4: Select **Serial- based receiver** in Receiver Mode

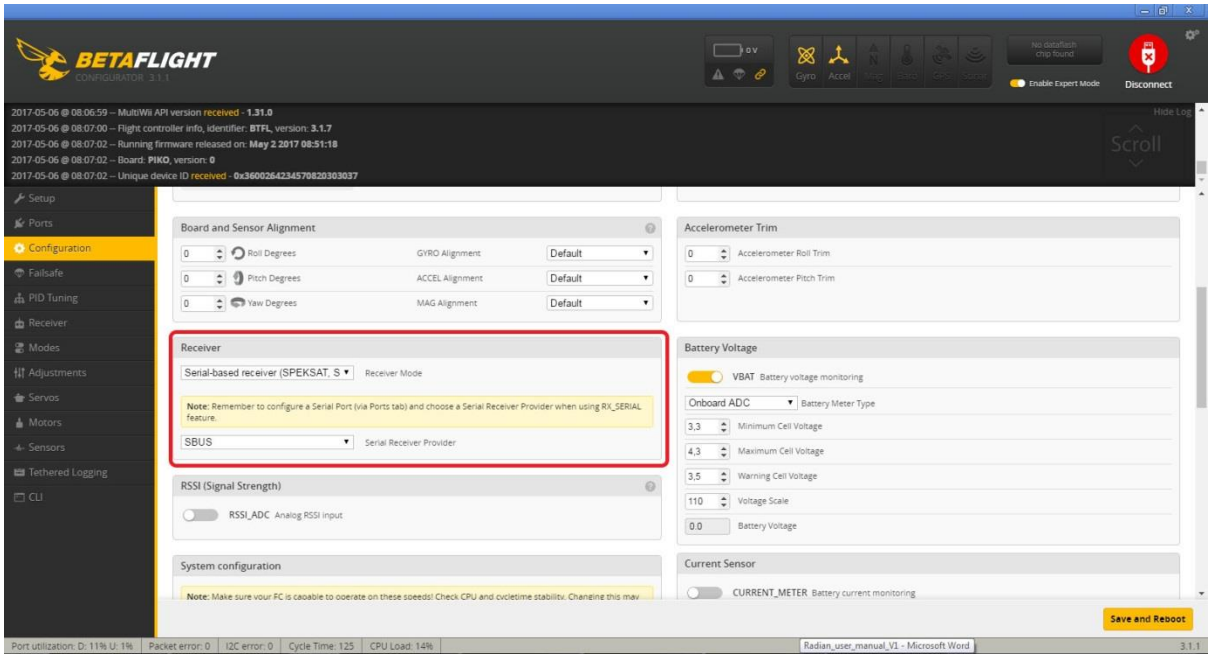

If you are using SBus, iBus or a Spektrum Satellite, you will need to pick your Serial Receiver Provider. Follow this table:

RX Type	Serial Receiver Provider
DSM2 Satellite	SPEKTRUM1024
DSMX Satellite	SPEKTRUM2048
FrSky RX	SBUS
Futaba RX	SBUS
FlySky RX	IBUS
Turnigy RX	IBUS

Ex: If you use **SPD15** or **XSR Receiver** then you choose **SBUS** in Serial Receiver Provider.

Go to **CLI** and type the following commands:

set sbus_inversion = ON
save

If you use **LR1000D** Receiver please type:

set sbus_inversion = ON
save

Step 5: Go to **Receiver** tab to configure the receiver and select the **channel mapping** compatible with your transmitter.

Ex: Choose 3rd mapping (JR/ Spektrum/ Graupner) if you use **FrSky** Receiver.

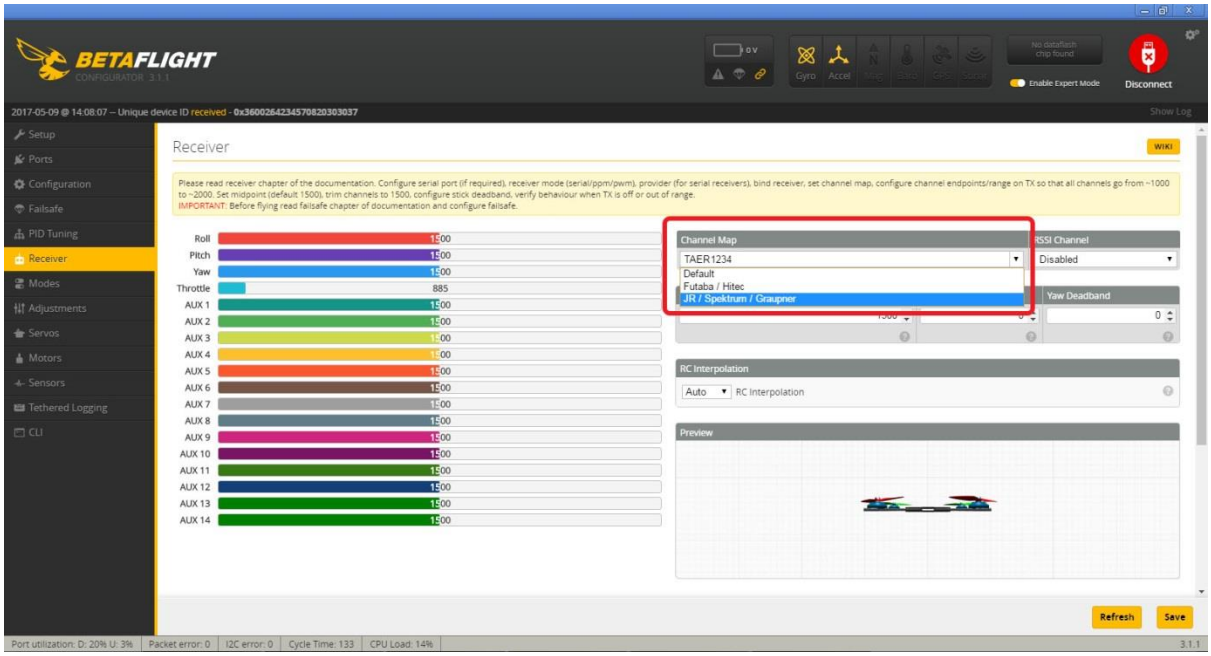

Step 6: Go to Modes to set **ARM range** and choose auxiliary functions Aux.

* Note: the Aux number associated with the switch you will use for arming, other modes function

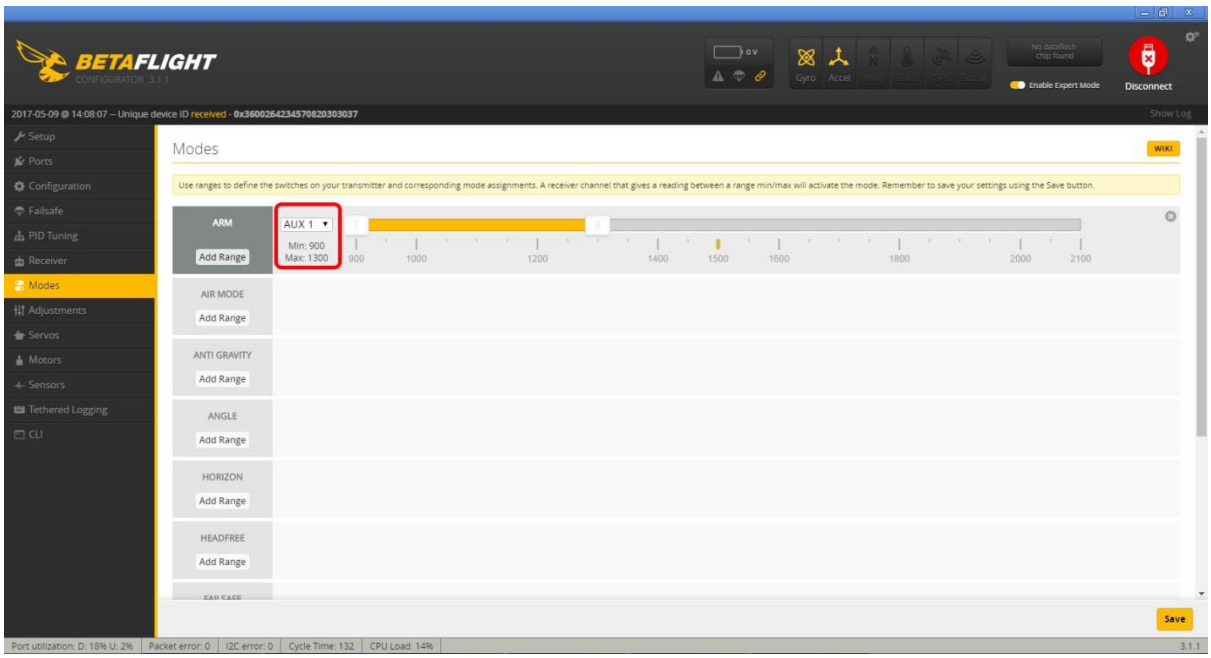

Tips

How to configure your Spektrum RX with your flight controller:

In Betaflight Configurator:

- Go to the **Ports** tab
- Enable "**Serial RX**" on the UART 3

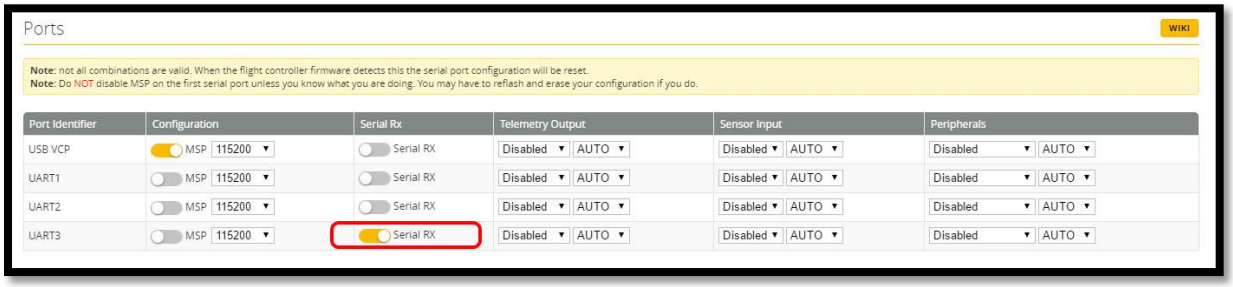

Click "**Save**".

Then go to the **Configuration** tab. Under the section labeled "**Receiver**", pick **SPEKTRUM2048**. *(Note: If you are using a **DSM2** receiver, pick **SPEKTRUM1024**.)*

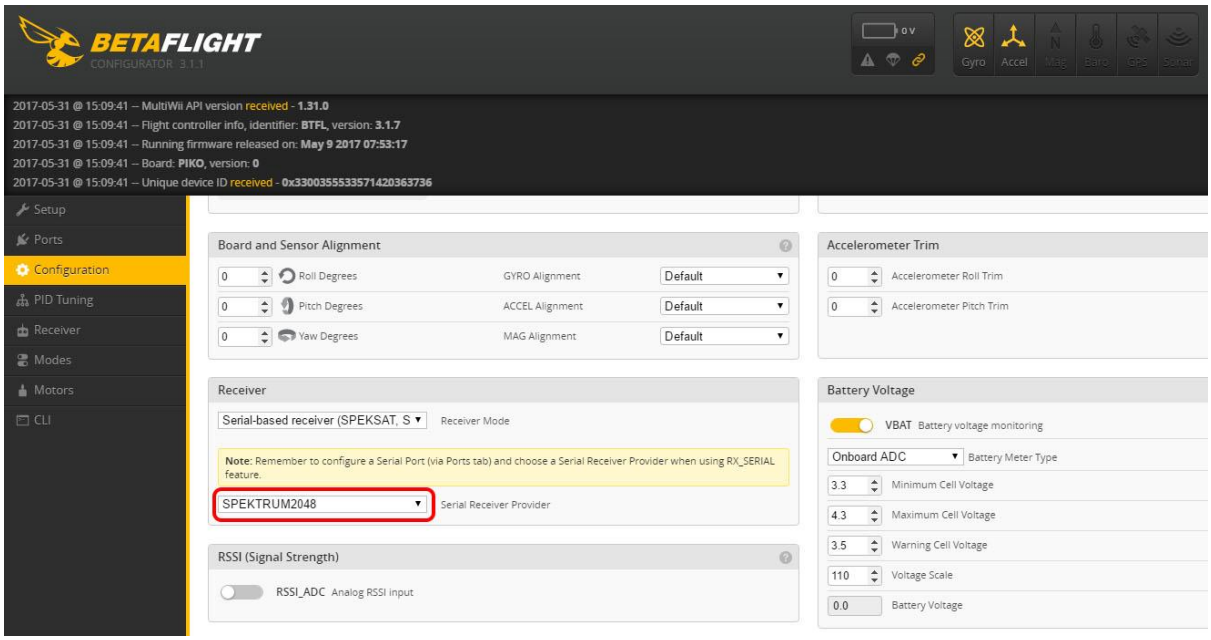

Click "**Save**".

Finally, go to the **Receiver** tab. Pull down the drop down that says "**Channel Map**" and select the "**JR / Spektrum / Graupner**" option.

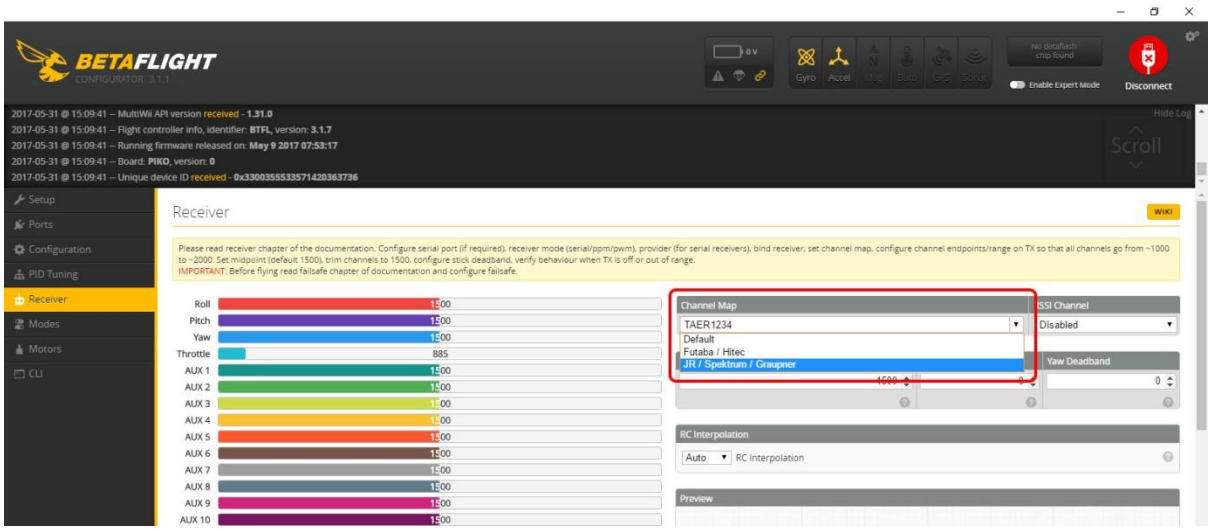

Once again, click "**Save**".

How to turn on bind mode

Safety warning: never plug battery to the quad during setup.

Connect quadcopter to the computer and go to Command-line interface (CLI) tab.

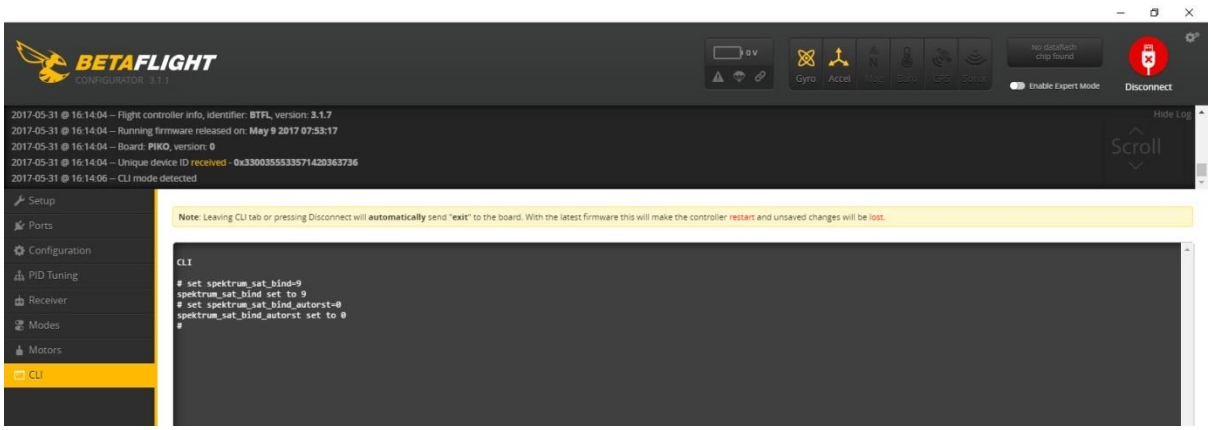

Remember to type "**save**" and hit **enter** after these commands have been executed.

Type in the commands as pictured above, or copy and paste them from below:

set spektrum_sat_bind=9

set spektrum_sat_bind_autorst=0

save

Note – if you are using a **DSM2 receiver**, change "**set spektrum_sat_bind=9**" to

"**set spektrum_sat_bind=5**"

Reboot your flight controller by unplugging the flight controller from your PC then plugging it back in.

Your RX should go into bind mode by now as the LED on the RX will be blinking rapidly.

How to set up OSD via BetaFlight Serialpassthrough:

Note:

- UART 1 is typically reserved for the USB so if you have connected anything you want to access on that UART, this will not work
- Depending on your setup you may need to power the device you are trying to connect to access it.

How to set up OSD with BetaFlight via Serialpassthough:

Step 1: Connect your flight controller to the USB on your computer.

Step 2: Open **Betaflight** and connect to the flight controller while noting the com port it's using.

Step 3: Go to the **Ports** tab and verify what UART you've connected to your device.

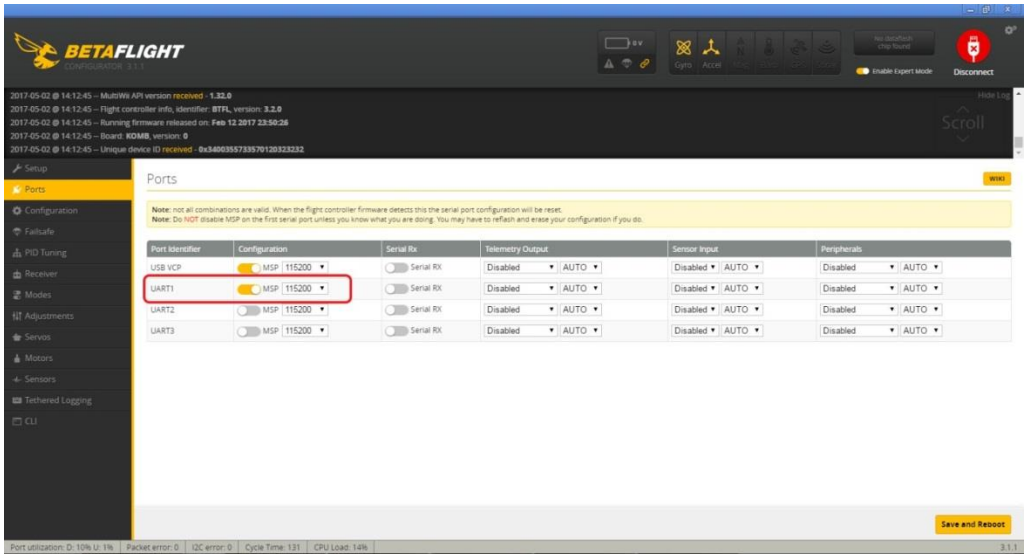

Step 4: Go to the **CLI** tab and type the following: *serialpassthrough (port) (baud)*

At here, my OSD connected to UART1 so you need to type:

serialpassthrough 0 115200

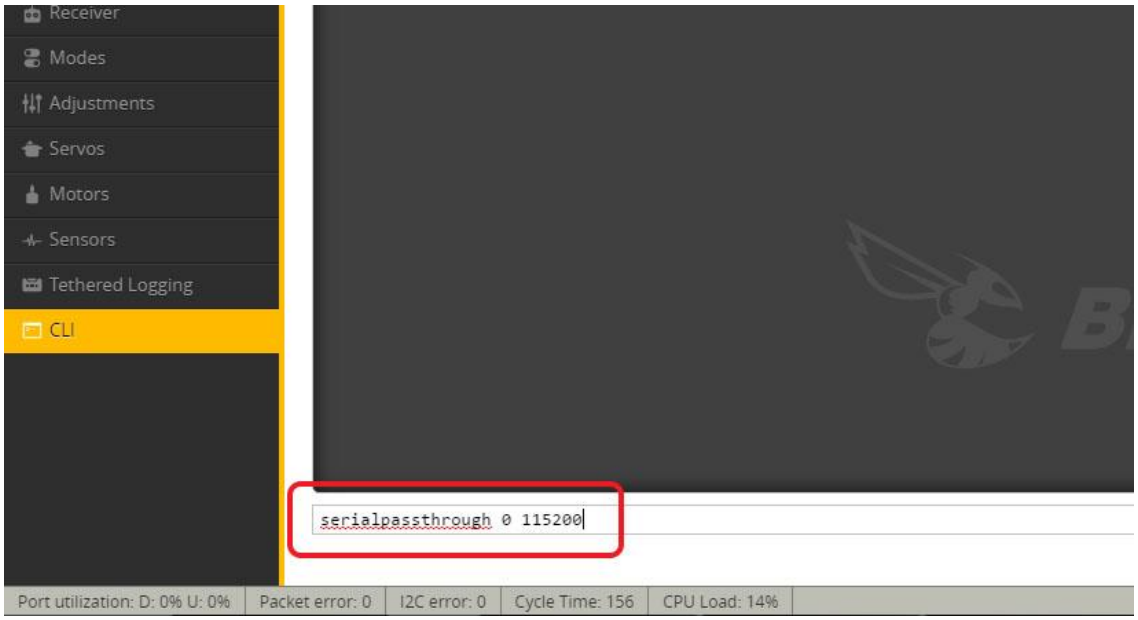

NOTE: *Betaflight labels serial ports starting from 0 not 1 yet most flight controllers label UART's starting with 1. So when selecting your serial port you will typically take whatever the UART number is and subtract 1 to get the serial port it's asking for.*

Step 4: Power up the device you are trying to connect to if it's not already

You will see what looks like random characters, start scrolling under the command you ran if it's working properly.

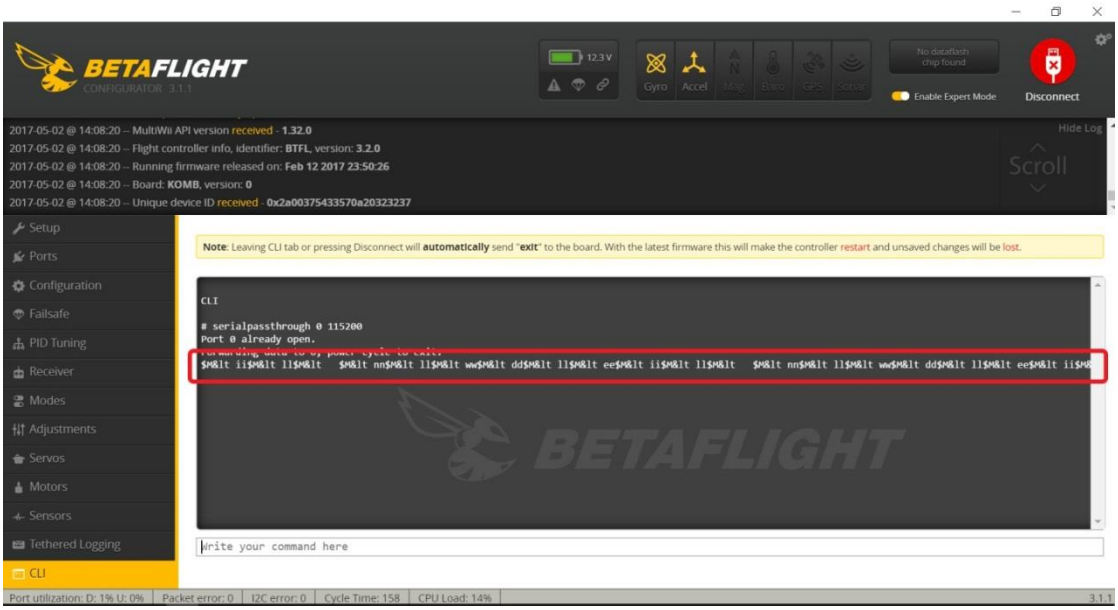

Step 5: Disconnect and **close** Betaflight but leave all the connections as they are.

Step 6: Open up your software you use to configure it. In my case it was MW OSD GUI.

Step 7: Select the **port** you noted in Betaflight being used to **connect** to your flight controller and connect.

Step 8: You should have read/write access now to the device.

When you're done all you need to do is reset the flight controller via reset button or unplugging USB and battery. This will remove the serialpassthrough so you can once again access it via Betaflight.

Thanks for using our product